Metal Roofing California website is owned and operated by Western Metal Deck

WESTERN METAL DECK

(909) 467-2016 • METALROOFINGCALIFORNIA.COM

STANDING SEAM

INSTALLATION GUIDE
WITH TRIM, FLASHINGS AND DETAILS

4169-22

Western Metal Deck
616 S. Oaks Ave. Ontario, CA 91762

(909) 467-2016
sales@metalroofingcalifornia.com

For More Information:
METALROOFINGCALIFORNIA.COM

Western States "Western Lock ™"
Standing SeamPanel
Installation, Flashings & Shop Drawing Detail Guide

Table of Contents

Section	Page
Notes to Designer /Installers	1
Fastener Placement and Selection	2-3
Key Roof Plan	4
Key Flashing / Trims	5-6-7-8
Eave Bullnose Detail	9
Fixed Eave Detail	10
Eave with Joggle Cleat Detail	11
Eave with Gutter	12
Gutter Splice	13
Eave Turn Down Knee	14
Fixed Ridge/Hip Detail	15
Floating Ridge/Hip Detail	16
Fixed Vented Ridge Detail	17
Floating Vented Ridge Detail	18
Floating Valley Detail	19
Fixed Valley Detail	20
Fixed High Eave Detail	21
Floating High Eave Detail	22
4 Piece Gable Detail	23
3 Piece Gable Detail	24
Starter Gable Detail	25
Alternate Gable Detail	26
Rake Detail	27
Alternate Rake Wall Detail	28
Z Closure Rake Wall Detail	29
Fixed End Wall/ Head Wall Detail	30
Floating End Wall/ Head Wall Detail	31
High to Low Transition Detail	32
Low to High Transition Detail	33
Half Valley Detail	34
Chimney Details	35,36,37,38
Panel End Lap Detail	39
Panel Clip Detail	40
Field Lap Detail	41
Panel Hem Detail	42
Pipe Penetration Detail	43
Notes	44
Custom Trim	45
Special Design Considerations	46

Western States "Western Lock™" Panel
Installation, Flashings & Shop Drawing Detail Guide

Notes to Designer and Installers

The details contained in this guide are proven industry details and are intended to be used as a design aid and installation guide. It does not depict all situations that may be encountered on all projects. Modifications are the responsibility of the designer/ owner/ installer. Consideration should be given for Fit for Purpose, Building use, Climate conditions such as temperature, snow, wind, and moisture, Governing Building Codes, and Maintenance. It is highly recommended that all trims and flashings be of the same material as the panels (metal, gauge, finish) to ensure long term performance and durability. Where possible, flashing edges should be hemmed to strengthen the edge and protect the cut edge from exposure.

Framing and Substrates

"Western Lock ™" panels are used over all type of substrates like Steel Decking, open purlins, spaced sheathing, and wood decking such as plywood. Most details in this guide are shown with panels attached to Solid Decking.

Note on Underlayment

Not all conditions require an underlayment, However metal roofing is susceptible to Condensation and it is recommended that an appropriate Roofing underlayment be use on all wood substrates to protect the structure during installation. For added protection from rain and snow, it is recommended to use rubberized Ice and water shield on eaves, valleys, and areas of roof penetrations.

Technical Assistance

Contact your WSDI sales or technical representative for any additional information or assistance.

Slope Requirements

It is recommended that "Western Lock ™" panels have a minimum slope requirement of 3:12 on all structures.

Valley and Snow Design

Valley design and dimension must be the proper width to accommodate high snow, rain, ice, and slope conditions. If possible, splices, penetrations, valleys, roof elevation changes, should be minimized in areas of high snow and ice accumulations.

Oil Canning

Oil canning is a condition common with flat metal surfaces. This waviness is caused by steel mill tolerances, forming, variations in the structures surfaces, and hardness of the steel. Measures are taken at the roll forming process, like profile design, steel gauge, corrective leveling, to minimize the effects of oil canning. Oil Canning is a Characteristic of steel and can not be eliminated totally and therefore is not reason for rejection of the panels.

Job Site Storage

While waiting to be installed on the job site, Storage of panels, trim crates, and flat sheet should be sloped in order to allow for proper moisture run off. One end should be elevated so as not to allow ponding of water on the metal surface. When using tarps for protection, proper ventilation should be provided to prevent condensation. Moisture or condensation that is trapped inside a bundle can lead to white rust on sheeting.

References

For other installation techniques and details, The Sheet Metal and Air Conditioning Contractors National Association Inc. (SMACNA) and NRCA manuals are great resource for working with sheet metal.

Fastener Selection

Notes to Installers:

- Fastener Selection will vary depending on type and thickness of substrate.
- Design Calculations for clip spacing should be completed by the design engineer.
- The use of Butyl tape mastic, Butyl sealants and Curing Sealants is always recommended to insure weather tight installation.
- Panels and flashings should never be installed in contact with dissimilar metals.
- Use only those flashings and accessories designed for use with this panel.
- Panel clip attachment screws must be long enough to fully penetrate through roof deck substrate or penetrate solid lumber at least one inch.

- Exposed Trim Fasteners should have sealing washers and be coated to provide protection against corrosion.
- Screws must be properly driven to ensure holding strength and proper seal. (see diagram)
- Recommended drill speed is 2000rpm. Improper setting of drill speed can lead to snapping of screw heads.
- Pre drilling of screw holes may be necessary with heavy gauge metals.

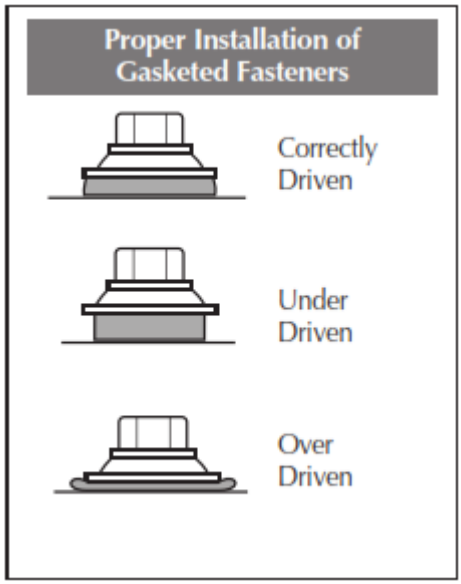

Fastener Selection

Description	Application	
14 x 7/8" Lap Self tap 14 x7/8 Lap Stainless	Used to attach Trims . Stainless to be used with A606-4 Steel	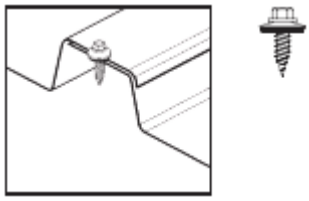
#10-12 x1" Pancake head Wood #10-12 x 1" SD PH Self Driller Steel	Used to attach Panel clips. Used to secure trims to substrates. Also available in Stainless Steel.	
1/8" Stainless Rivets	Used for Trim to Trim attachment or trim to wall panels.	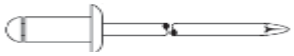
Stainless Screws #10 x1 x1/4" Wood Drillers #10 x 1.5 x ¼" #10 x 2" x ¼"	Used for panel attachment for panels made with A606-4 Steel	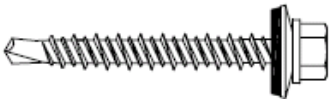

- The table above shows the panel Fasteners provided by WSD. Special order screws are available.

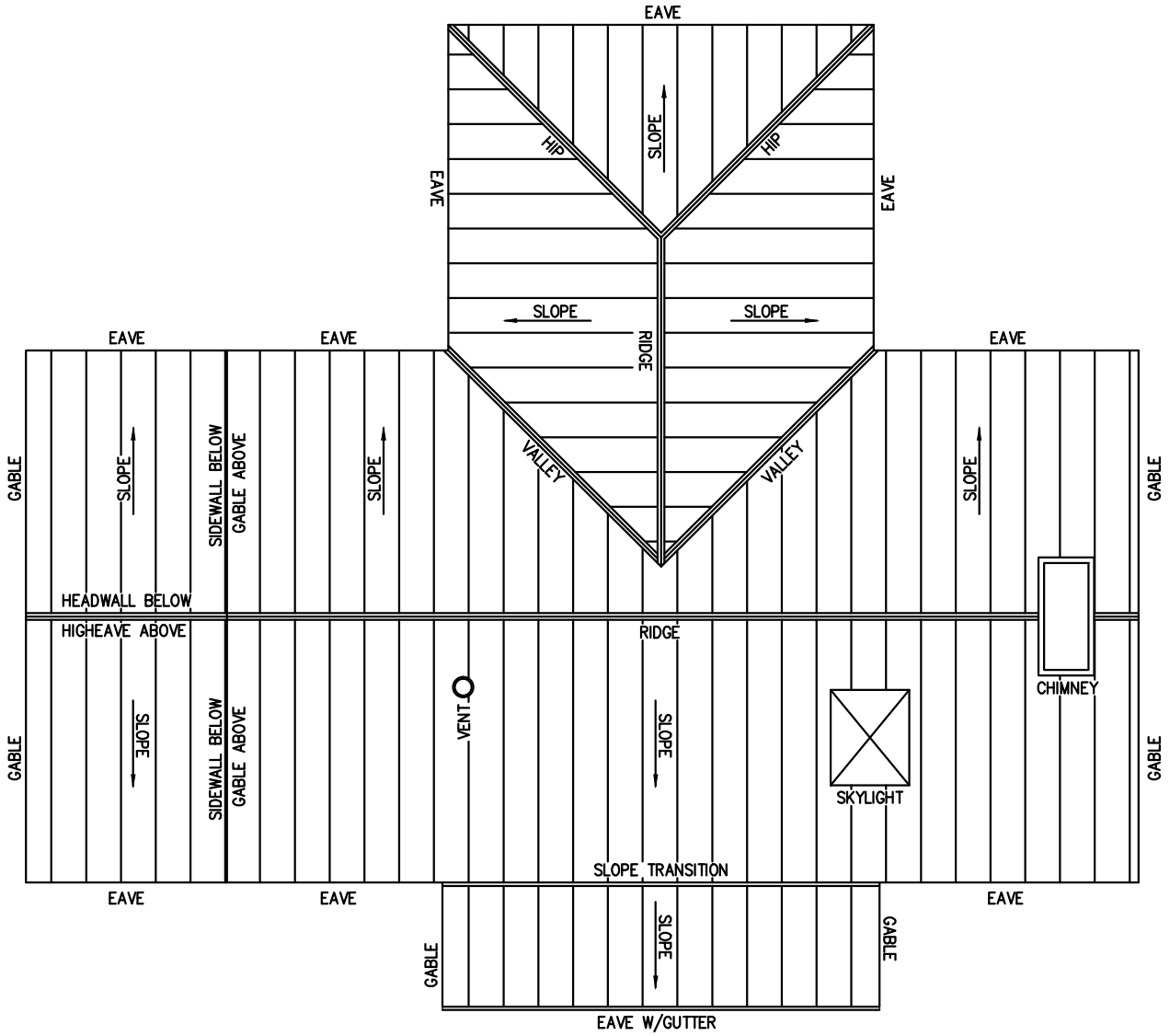

FLASHING TYPE	DETAIL NO.
STANDARD TRIM	WSD-ST5
STANDARD TRIM	WSD-ST6
STANDARD TRIM	WSD-ST7
STANDARD TRIM	WSD-ST8
EAVE FLASHING WITH BULL NOSE DETAIL	WSD-D1
FIXED EAVE DETAIL	WSD-D2
EAVE FLASHING WITH JOGGLE CLEAT DETAIL	WSD-D3
EAVE WITH GUTTER DETAIL	WSD-D4
EAVE GUTTER SPLICE DETAIL	WSD-D5
TURN DOWN KNEE DETAIL	WSD-D6
FIXED RIDGE & HIP DETAIL	WSD-D7
FLOATING RIDGE & HIP DETAIL	WSD-D8
FIXED VENTED RIDGE DETAIL	WSD-D9
FLOATING VENTED RIDGE DETAIL	WSD-D10
FLOATING VALLEY DETAIL	WSD-D11
FIXED VALLEY DETAIL	WSD-D12
FIXED HIGH EAVE DETAIL	WSD-D13
FLOATING HIGH EAVE DETAIL	WSD-D14
GABLE DETAIL	WSD-D15
ALTERNATE GABLE DETAIL	WSD-D15A
ALTERNATE GABLE DETAIL	WSD-D15B
ALTERNATE GABLE DETAIL	WSD-D15C
RAKE DETAIL	WSD-D16
ALTERNATE RAKE DETAIL	WSD-D16A
ALTERNATE RAKE DETAIL	WSD-D16B
FIXED HEADWALL DETAIL	WSD-D17
FLOATING HEADWALL DETAIL	WSD-D18
HIGH TO LOW TRANSITION DETAIL	WSD-D19
LOW TO HIGH TRANSITION DETAIL	WSD-D20
HALF VALLEY DETAIL	WSD-D21
ISOMETRIC CURB & CHIMNEY DETAIL	WSD-D22
CRICKET FLASHING AT CURB & CHIMNEY DETAIL	WSD-D23
PITCHBREAK AT CURB & CHIMNEY DETAIL	WSD-D24
SIDEWALL AT CURB & CHIMNEY DETAIL	WSD-D25
PANEL END LAP DETAIL	WSD-D26
FIELD LAP DETAIL	WSD-D27
PANEL HEM DETAIL	WSD-D28
PIPE PENETRATION DETAIL	WSD-D29
MISC. NOTES	WSD-MN30
CUSTOM TRIM SHEET	WSD-CT31

Western States Metal Roofing

901 W. Watkins St.
Phoenix, AZ 85007
www.MetalForRoofing.com
www.RustedRoofing.com
www.MetalDeck.com

Phone: (602) 495-0048
Fax: (602) 261-7726
877-PURLINS (787-5467)

DETAIL:

KEY ROOF PLAN

PANEL TYPE:

WESTERN LOCK

A	05-20-13
REV:	DATE:
DETAIL #:	

TRIM CLEAT WS-401

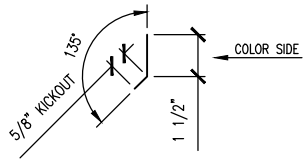

BULL NOSE DRIP/ EAVE TRIM WS-402

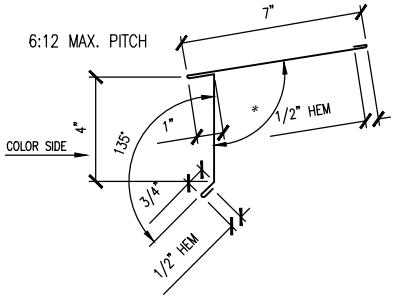

JOGGLE CLEAT WS-403

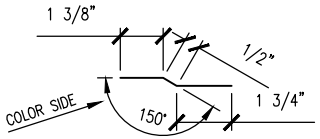

STANDARD EAVE TRIM WS-404

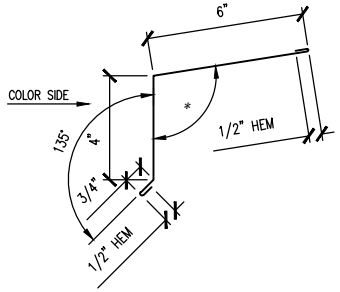

7" RIDGE/HIP CAP FLASHING WS-405H

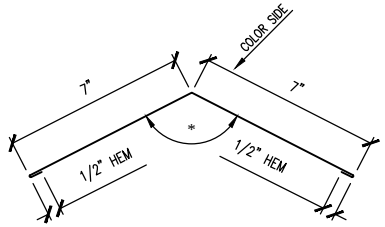

KNEE/RIB COVER WS-406

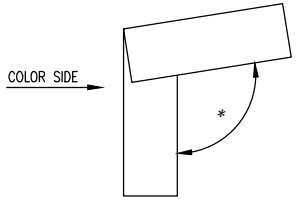

DRIP FLASHING WS-407

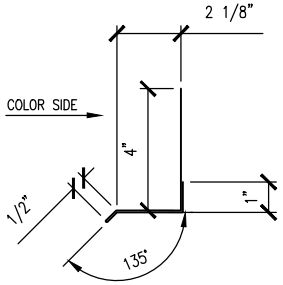

GUTTER EAVE TRIM WS-408

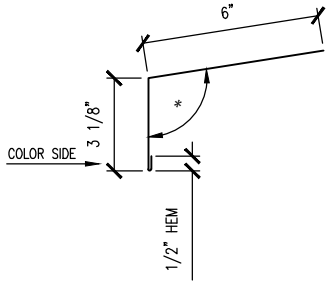

ZEE CLOSURE WS-410

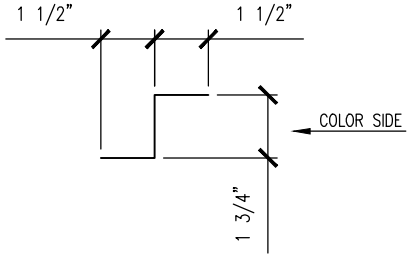

6" PERFORATED VENT STRIP WS-411

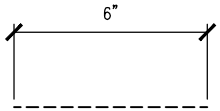

GUTTER SPLICE WS-413

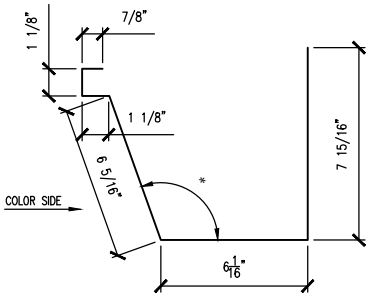

STD. PRE-HUNG BOX GUTTER WS-415

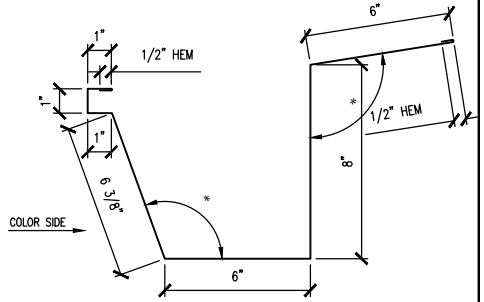

Western States Metal Roofing

901 W. Watkins St.
Phoenix, AZ 85007
www.MetalForRoofing.com
www.RustedRoofing.com
www.MetalDeck.com

Phone: (602) 495-0048
Fax: (602) 261-7726
877-PURLINS (787-5467)

STANDARD TRIM

PANEL TYPE:
WESTERN LOCK

A	05-20-13
REV:	DATE:

DETAIL #:
WSD-ST5

PEAK/HIGH EAVE WS-419

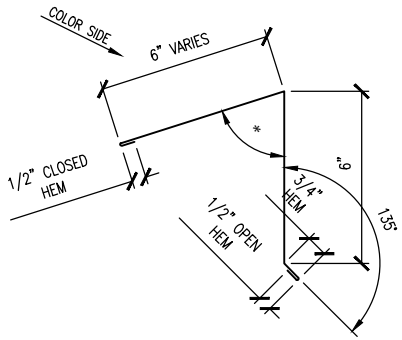

10" VENTED RIDGE CAP WS-420V

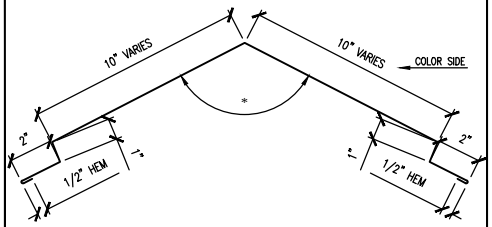

VALLEY PAN 18 3/4" WS-425

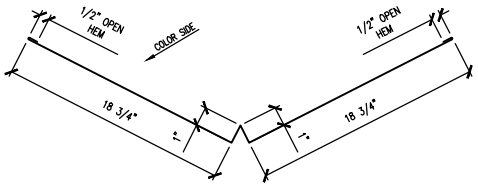

HEAD/END WALL TRIM WS-428

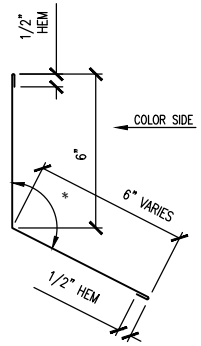

REGLET FLASHING WS-429

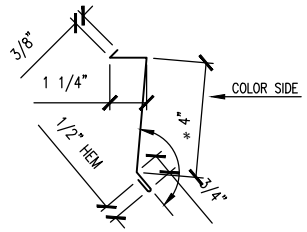

RECEIVER TRIM WS-430

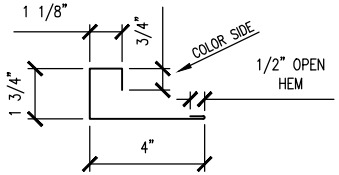

ANGLE TRIM WS-431

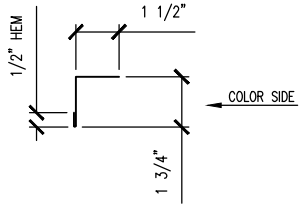

RAKE SIDEWALL TRIM WS-432

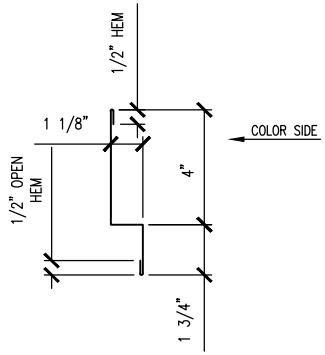

GABLE TRIM WS-434

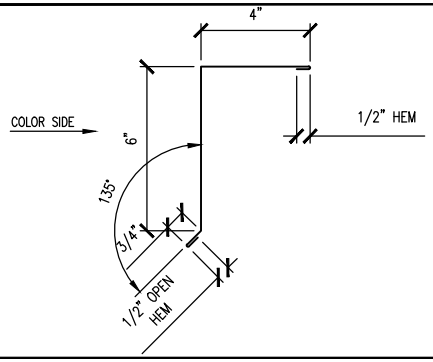

ALTERNATE GABLE TRIM WS-435

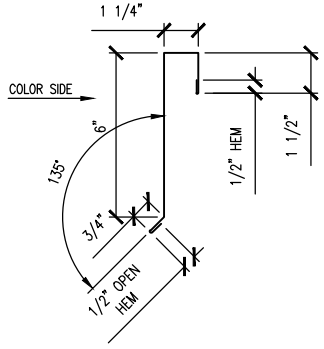

TRANSITION TRIM HIGH TO LOW WS-436

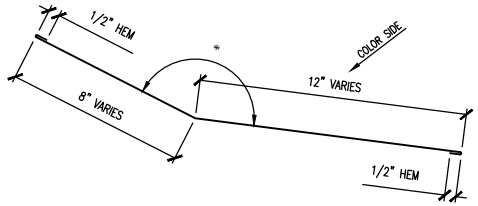

TRANSITION TRIM LOW TO HIGH WS-437

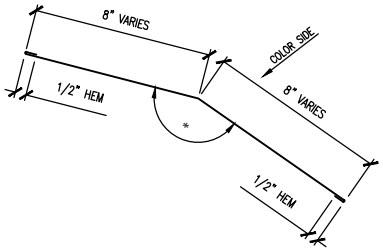

Western States Metal Roofing

901 W. Watkins St.
Phoenix, AZ 85007
www.MetalForRoofing.com
www.RustedRoofing.com
www.MetalDeck.com

Phone: (602) 495-0048
Fax: (602) 261-7726
877-PURLINS (787-5467)

STANDARD TRIM

PANEL TYPE:
WESTERN LOCK

A	05-20-13
REV:	DATE:

DETAIL #:
WSD-ST6

CRICKET FLASHING WS-450

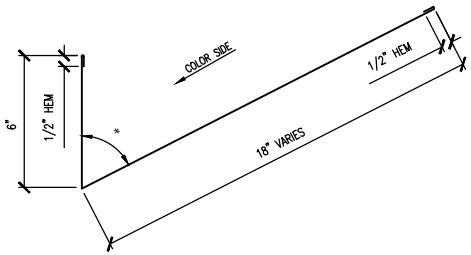

GABLE DRIP TRIM WS-451

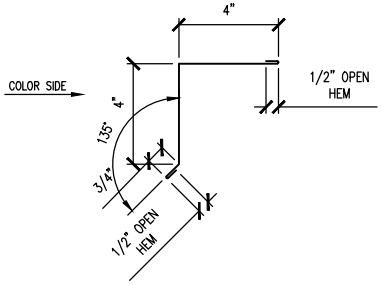

GABLE STARTER TRIM WS-452

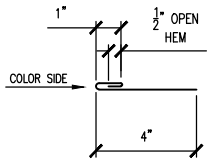

ALTERNATE GABLE TRIM WS-453

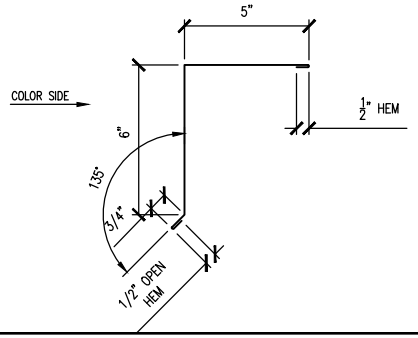

ALTERNATE RAKEWALL TRIM WS-454

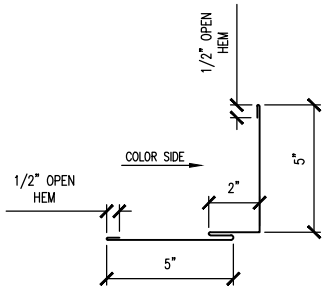

ALTERNATE RAKEWALL TRIM WS-455

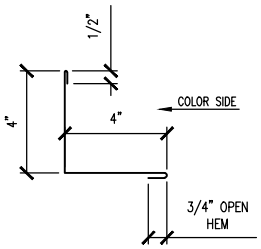

DOWNSPOUT STRAIGHT WS-426

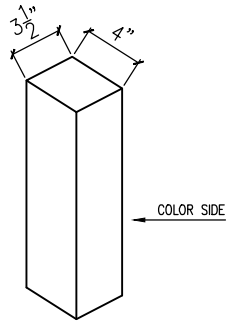

DOWNSPOUT W/KICK OUT WS-427

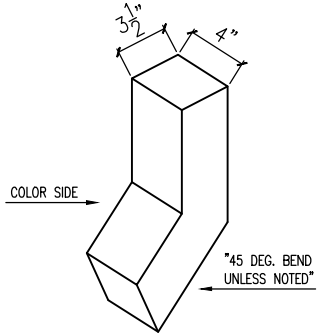

DOWNSPOUT ELBOW WS-443

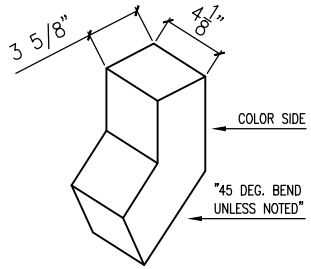

DOWNSPOUT OUTLET WS-475

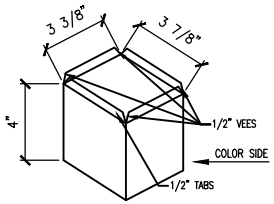

GUTTER STRAP WS-412

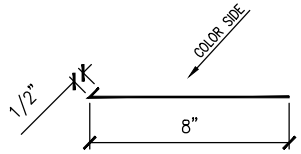

GUTTER END WS-414

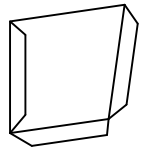

Western States Metal Roofing

901 W. Watkins St.
Phoenix, AZ 85007
www.MetalForRoofing.com
www.RustedRoofing.com
www.MetalDeck.com

Phone: (602) 495-0048
Fax: (602) 261-7726
877-PURLINS (787-5467)

STANDARD TRIM

PANEL TYPE:
WESTERN LOCK

A	05-20-13
REV:	DATE:

DETAIL #:
WSD-ST7

DOWNSPOUT STRAP WS-442	FLOATING RIDGE/HIP CAP WS-456	FLOATING HIGH EAVE/PEAK WS-457	FLOATING HEA/END WALL WS-458
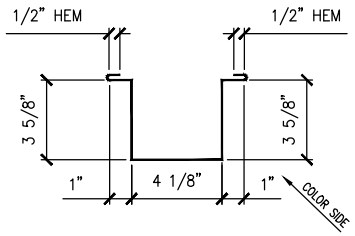	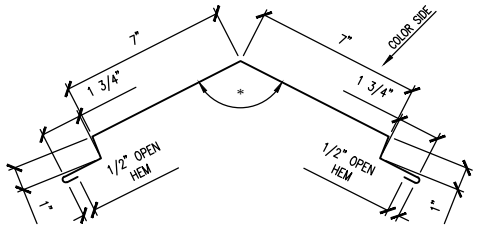	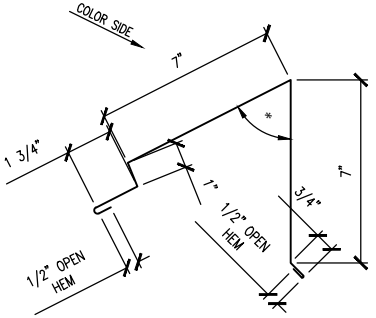	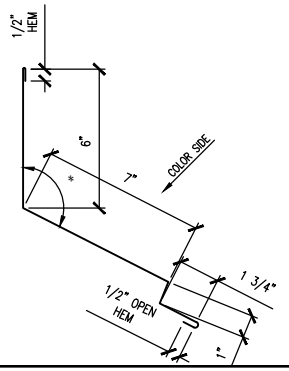
18GA PANEL SUPPORT WS-459			
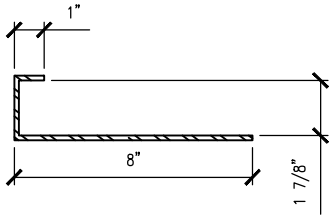			

Western States Metal Roofing

901 W. Watkins St.
Phoenix, AZ 85007
www.MetalForRoofing.com
www.RustedRoofing.com
www.MetalDeck.com

Phone: (602) 495-0048
Fax: (602) 261-7726
877-PURLINS (787-5467)

STANDARD TRIM

PANEL TYPE:
WESTERN LOCK

REV:	DATE:
A	05-20-13

DETAIL #:
WSD-ST8

* CAN ONLY BE BENT
FOR MAX. 6:12 PITCH

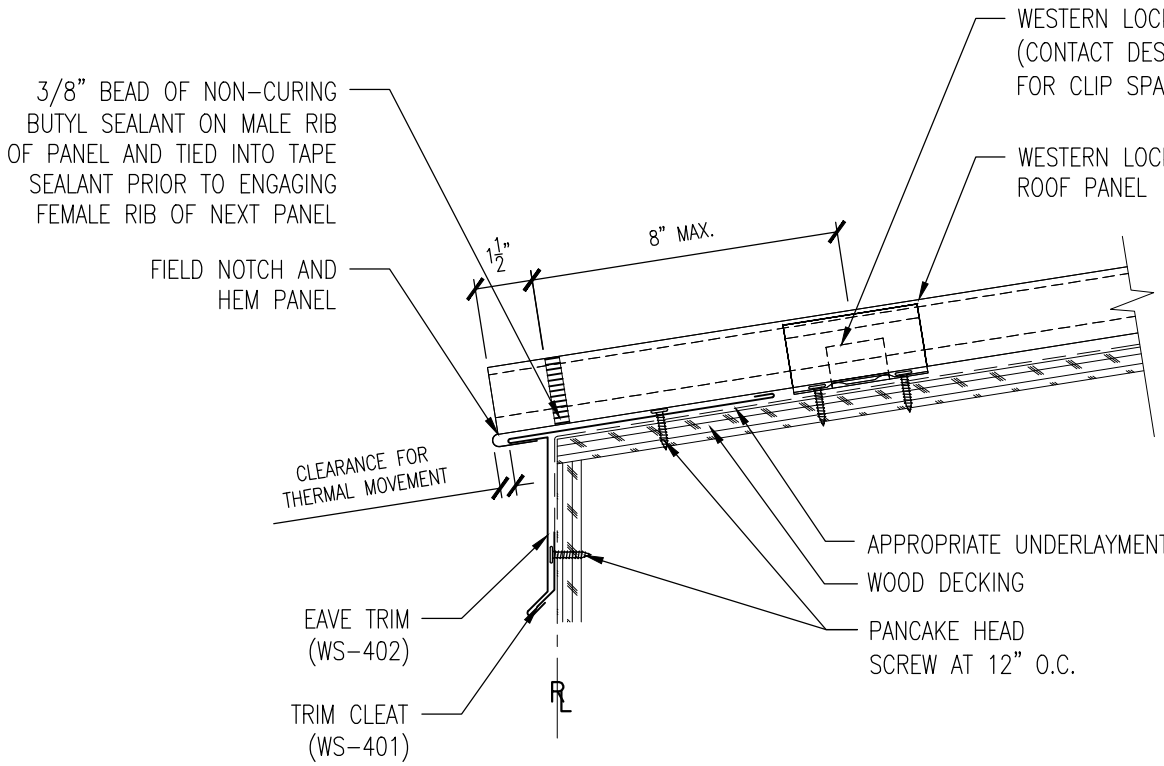

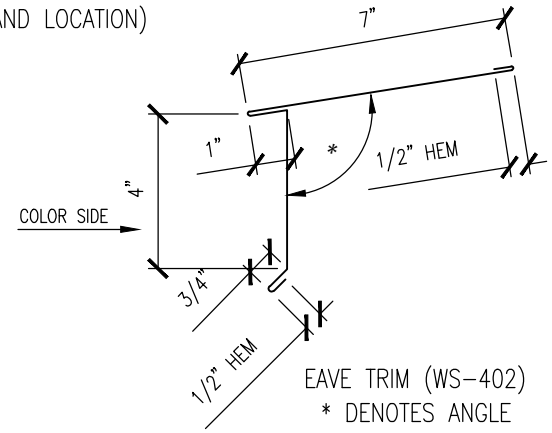

EAVE TRIM (WS-402)
* DENOTES ANGLE

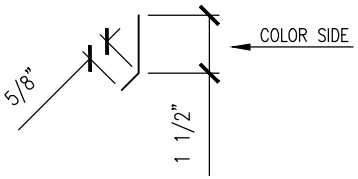

TRIM CLEAT (WS-401)

GAUGE: _____	COLOR: _____
LENGTH: _____	FINISH: _____
MATERIAL: _____	

Western States Metal Roofing
901 W. Watkins St.
Phoenix, AZ 85007
www.MetalForRoofing.com
www.RustedRoofing.com
www.MetalDeck.com
Phone: (602) 495-0048
Fax: (602) 261-7726
877-PURLINS (787-5467)

EAVE FLASHING W/ BULLNOSE DETAIL

PANEL TYPE: WESTERN LOCK

REV:	DATE:
A	05-20-13

DETAIL #: WSD-D1

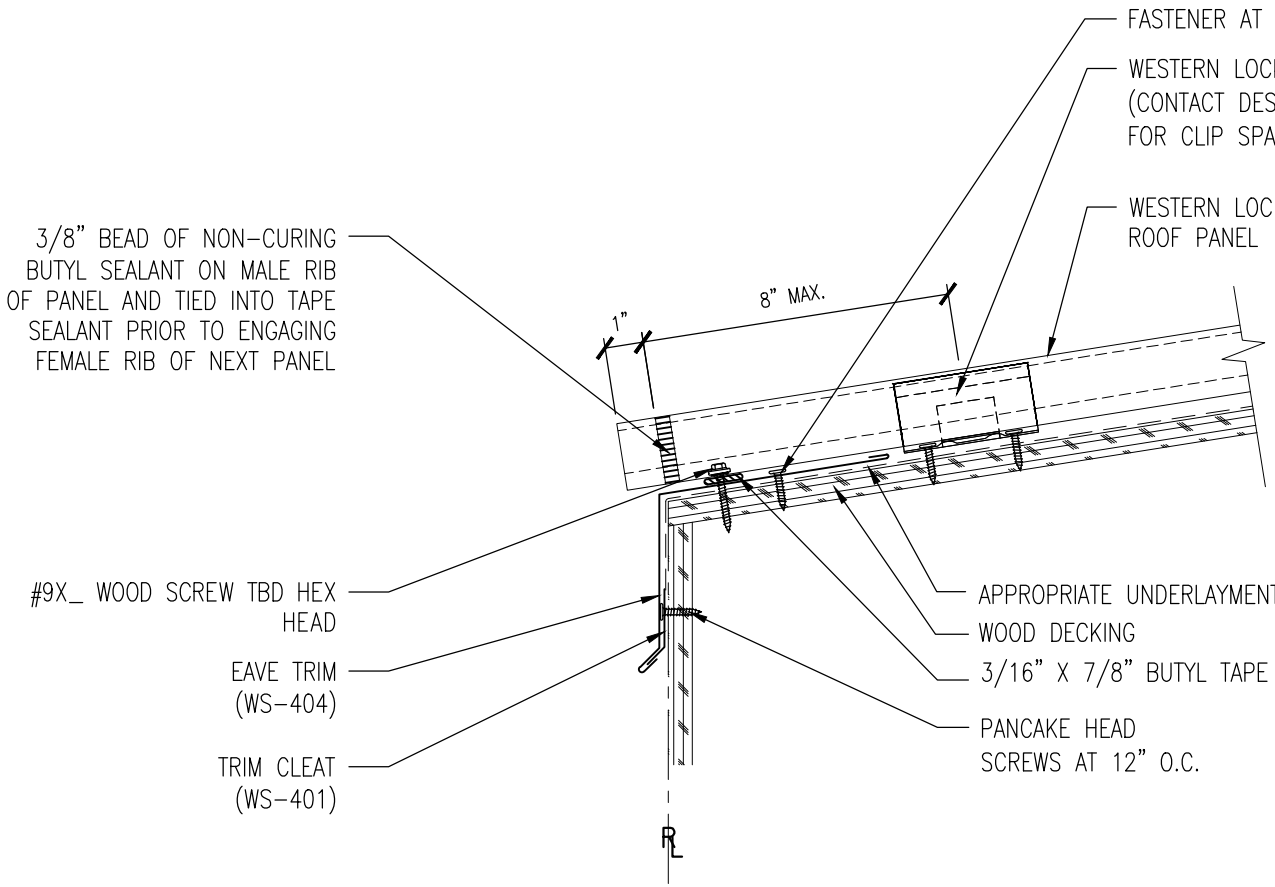

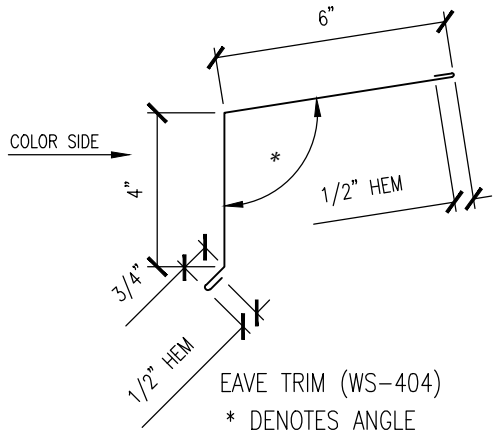

EAVE TRIM (WS-404)
* DENOTES ANGLE

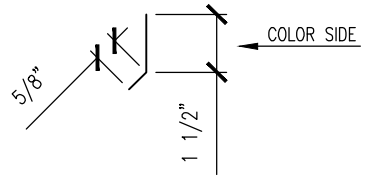

TRIM CLEAT (WS-401)

GAUGE: _____	COLOR: _____
LENGTH: _____	FINISH: _____
MATERIAL: _____	

Western States Metal Roofing

901 W. Watkins St.
Phoenix, AZ 85007
www.MetalForRoofing.com
www.RustedRoofing.com
www.MetalDeck.com

Phone: (602) 495-0048
Fax: (602) 261-7726
877-PURLINS (787-5467)

FIXED EAVE DETAIL

PANEL TYPE: WESTERN LOCK

REV:	DATE:
A	05-20-13

DETAIL #: WSD-D2

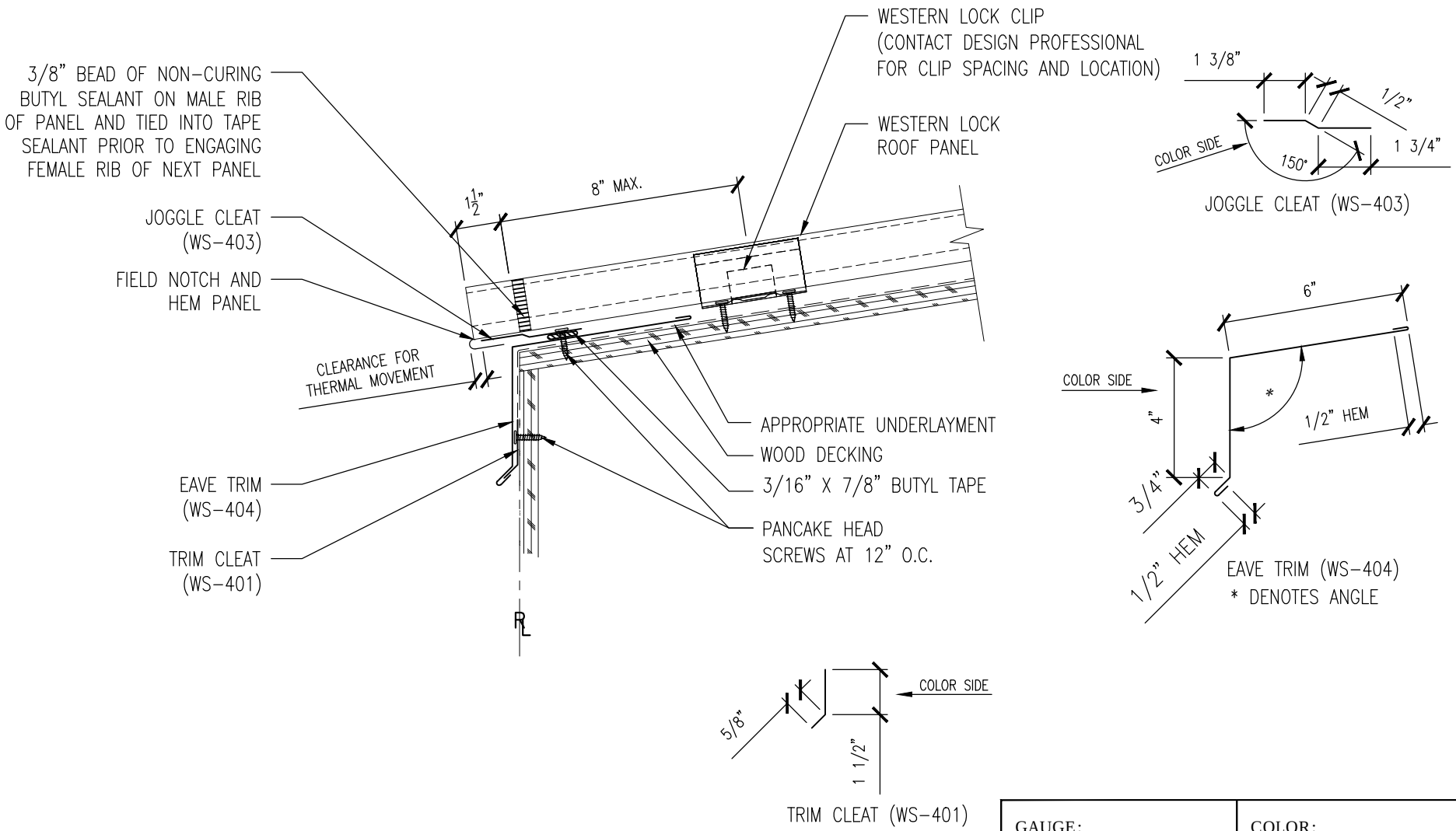

GAUGE: _____	COLOR: _____
LENGTH: _____	FINISH: _____
MATERIAL: _____	

Western States Metal Roofing
901 W. Watkins St.
Phoenix, AZ 85007
www.MetalForRoofing.com
www.RustedRoofing.com
www.MetalDeck.com
Phone: (602) 495-0048
Fax: (602) 261-7726
877-PURLINS (787-5467)

EAVE FLASHING W/ JOGGLE CLEAT DETAIL

PANEL TYPE: WESTERN LOCK

REV:	DATE:
A	05-20-13

DETAIL #: WSD-D3

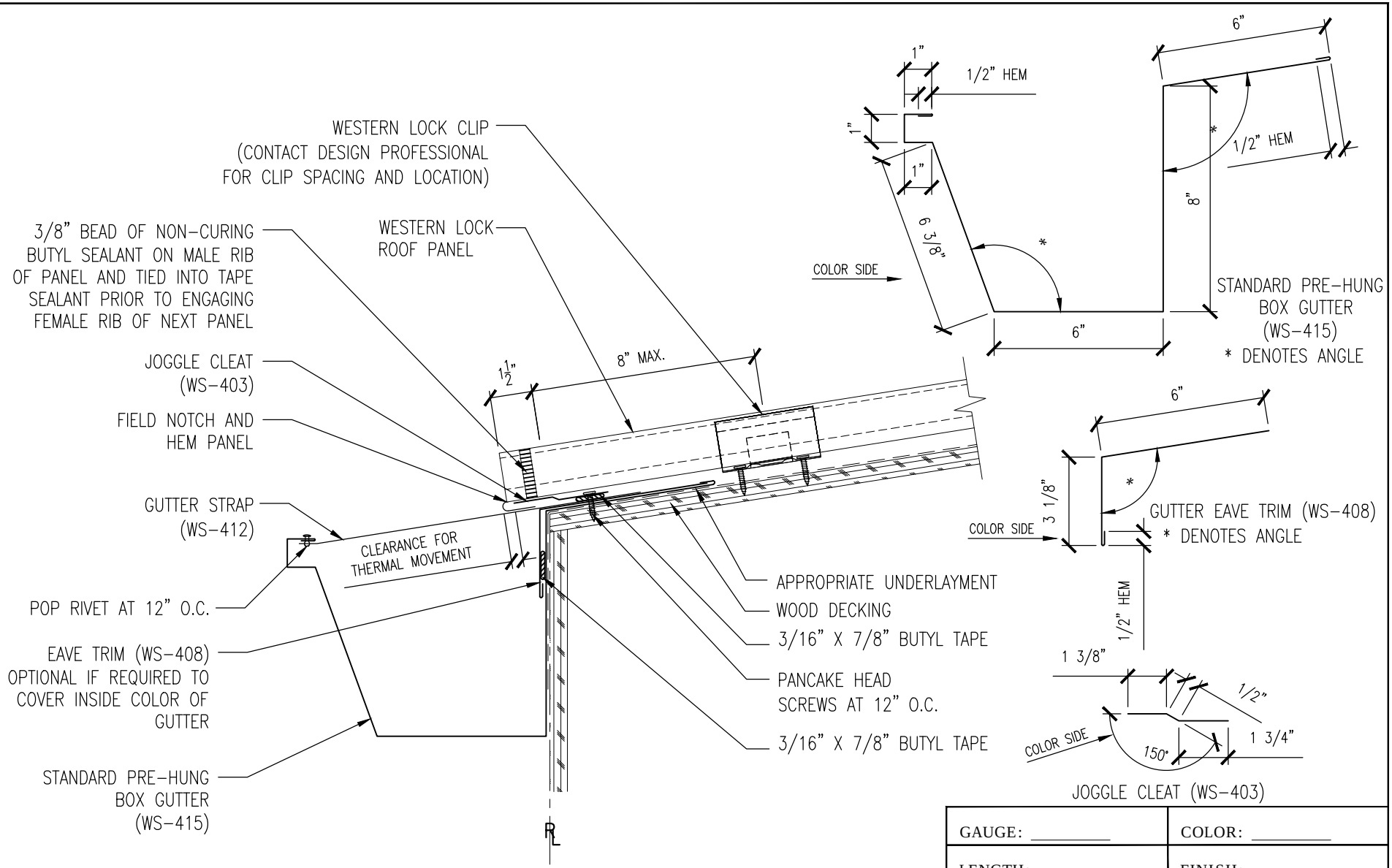

GAUGE: _____ COLOR: _____

LENGTH: _____ FINISH: _____

MATERIAL: _____

Western States Metal Roofing

901 W. Watkins St.
Phoenix, AZ 85007
www.MetalForRoofing.com
www.RustedRoofing.com
www.MetalDeck.com

Phone: (602) 495-0048
Fax: (602) 261-7726
877-PURLINS (787-5467)

EAVE WITH GUTTER DETAIL

PANEL TYPE: WESTERN LOCK

REV:	DATE:
A	05-20-13

DETAIL #: WSD-D4

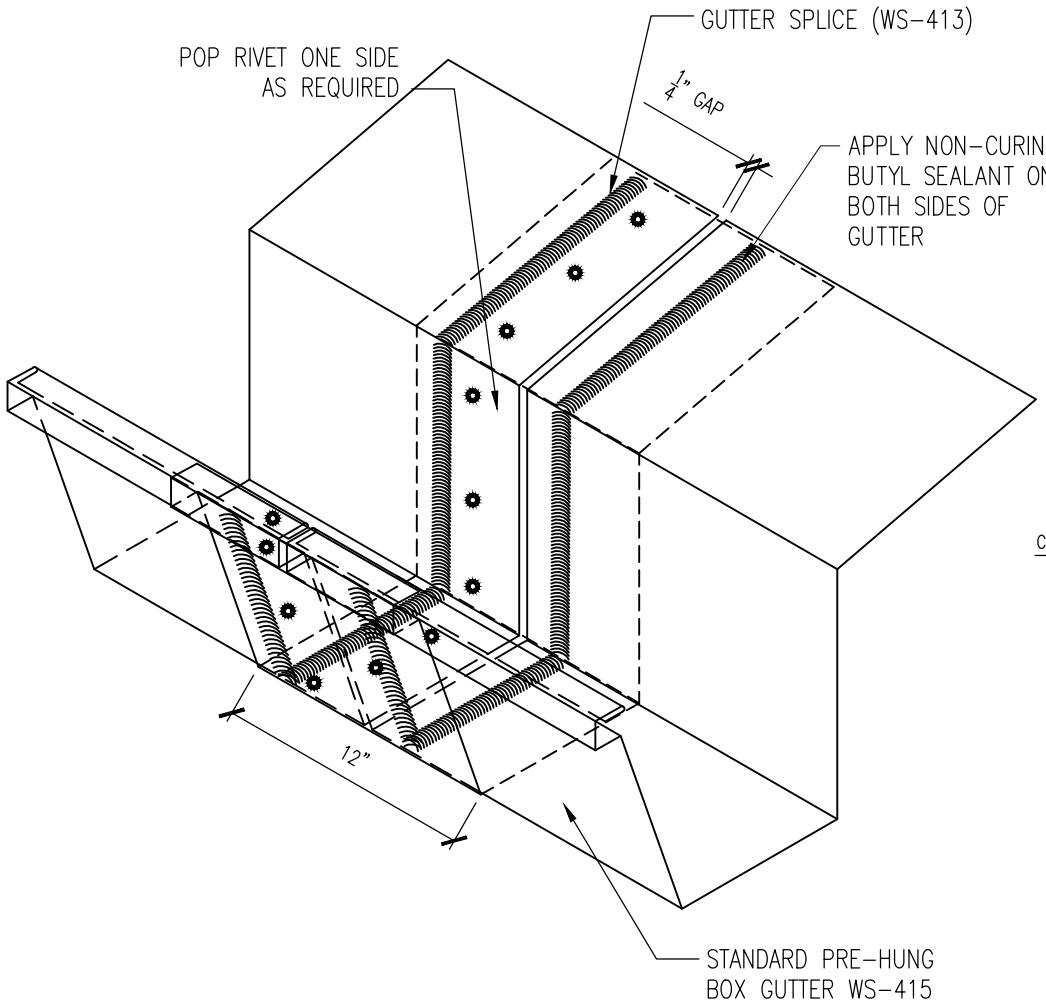

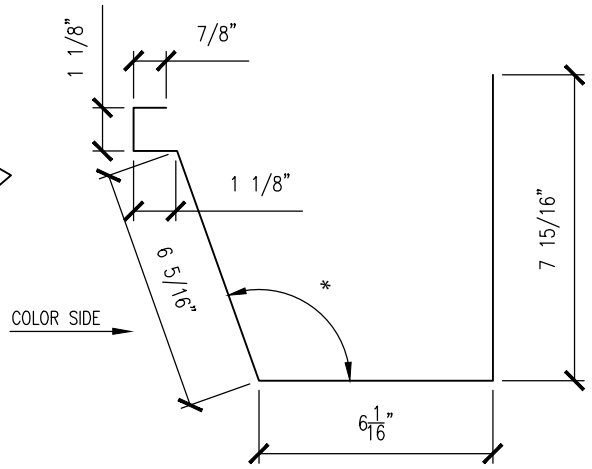

GUTTER SPLICE (WS-413)

* DENOTES ANGLE

GAUGE: _____	COLOR: _____
LENGTH: _____	FINISH: _____
MATERIAL: _____	

Western States Metal Roofing

901 W. Watkins St.
Phoenix, AZ 85007
www.MetalForRoofing.com
www.RustedRoofing.com
www.MetalDeck.com

Phone: (602) 495-0048
Fax: (602) 261-7726
877-PURLINS (787-5467)

EAVE GUTTER SPLICE DETAIL

PANEL TYPE: WESTERN LOCK

REV:	DATE:
A	05-20-13

DETAIL #: WSD-D5

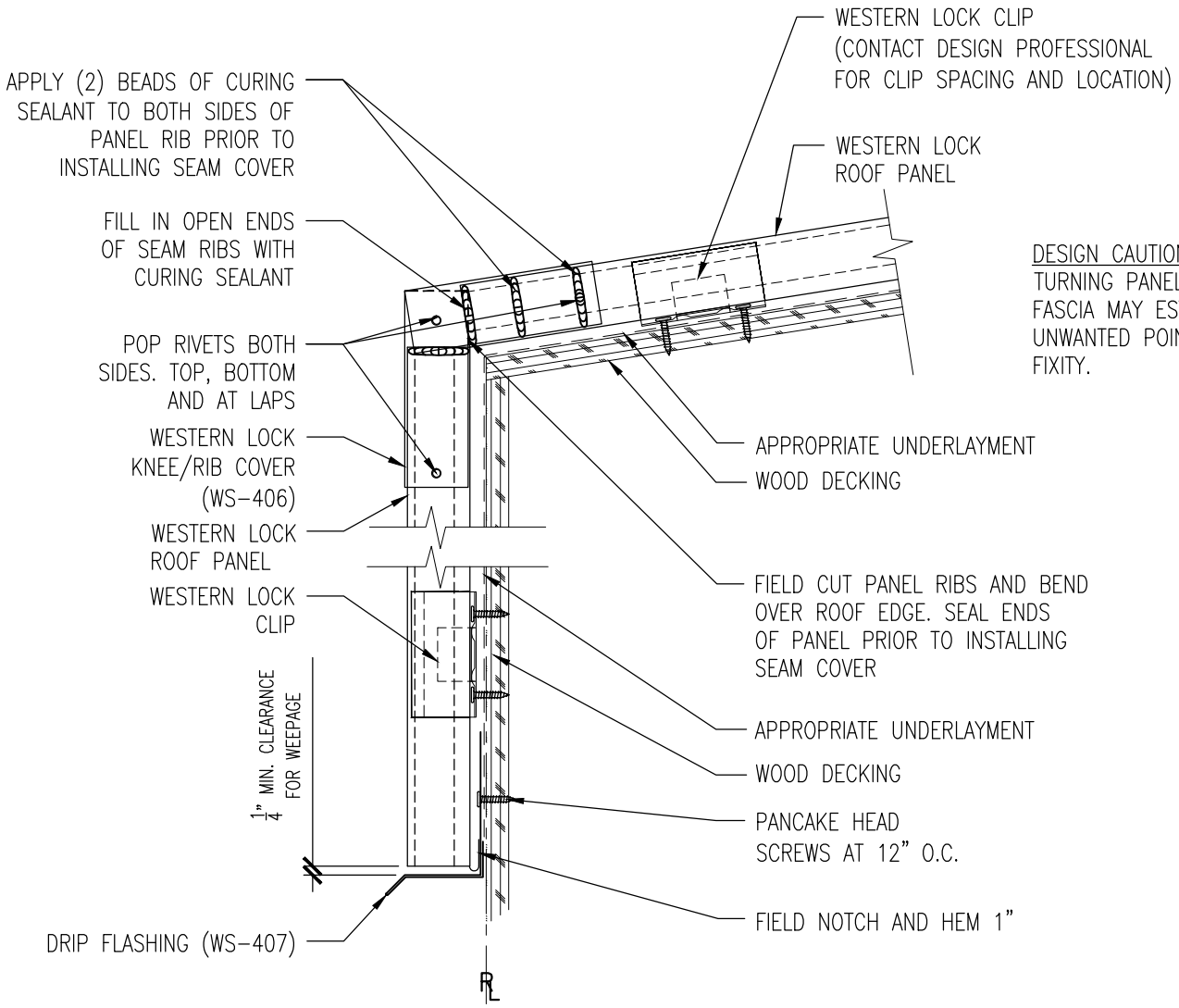

DESIGN CAUTION:
TURNING PANELS DOWN FOR FASCIA MAY ESTABLISH UNWANTED POINT OF PANEL FIXITY.

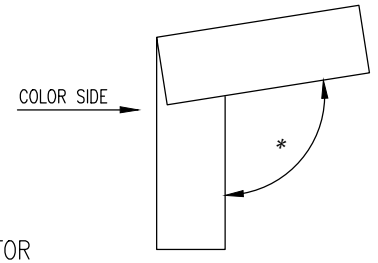

STANDING SEAM
KNEE/RIB COVER (WS-406)
* DENOTES ANGLE

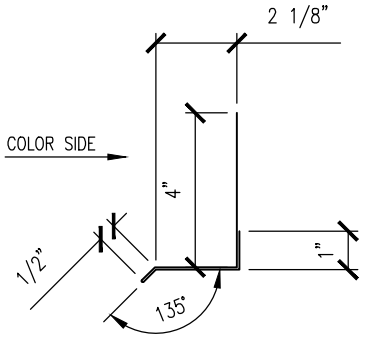

DRIP FLASHING (WS-407)

GAUGE: _____	COLOR: _____
LENGTH: _____	FINISH: _____
MATERIAL: _____	

Western States Metal Roofing
901 W. Watkins St.
Phoenix, AZ 85007
www.MetalForRoofing.com
www.RustedRoofing.com
www.MetalDeck.com
Phone: (602) 495-0048
Fax: (602) 261-7726
877-PURLINS (787-5467)

TURN DOWN KNEE DETAIL

PANEL TYPE: WESTERN LOCK

REV:	DATE:
A	05-20-13

DETAIL #: WSD-D6

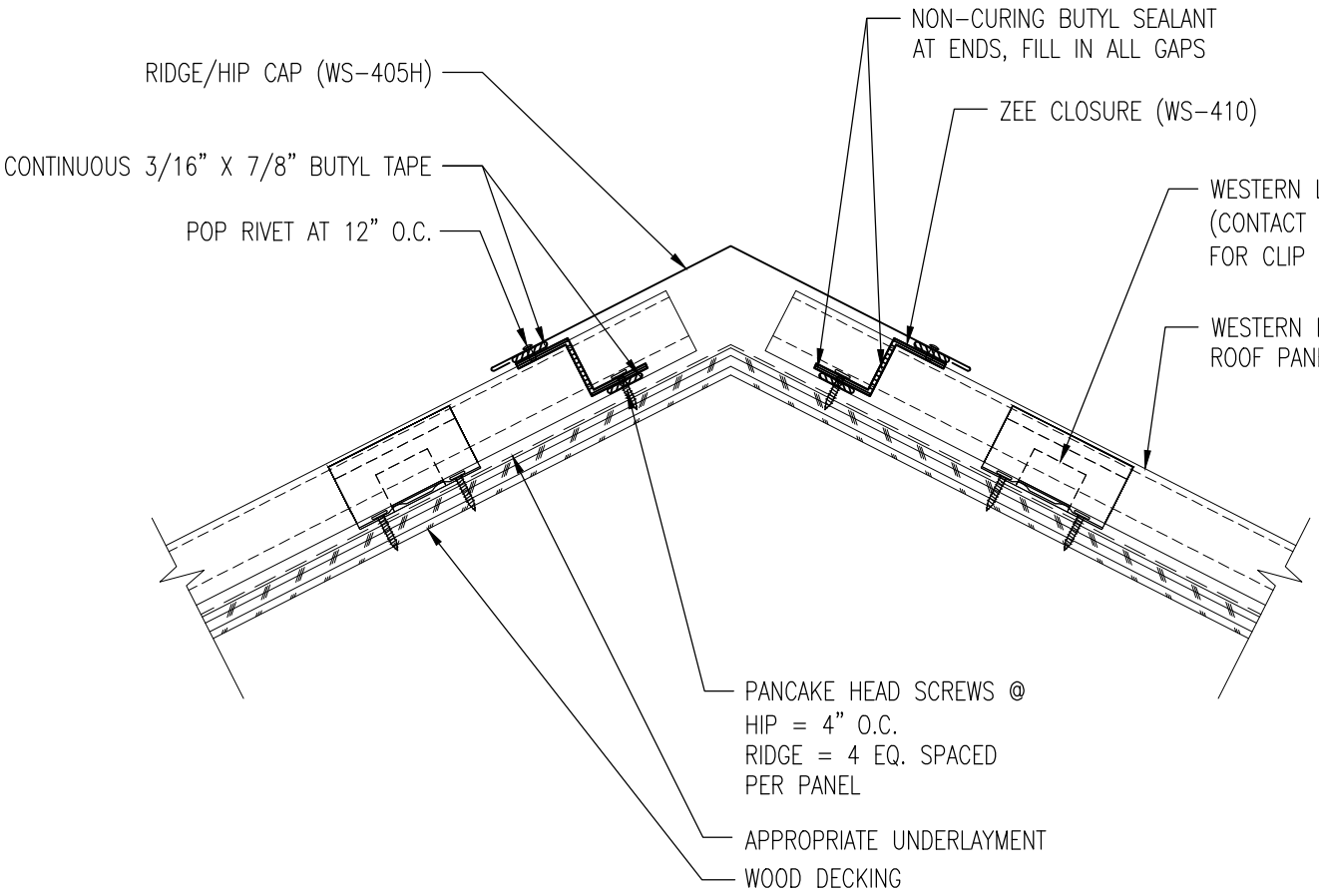

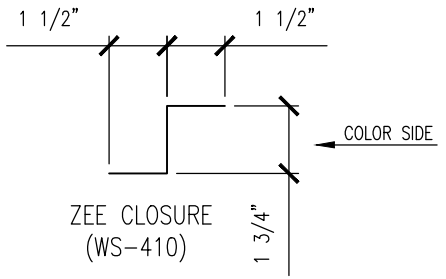

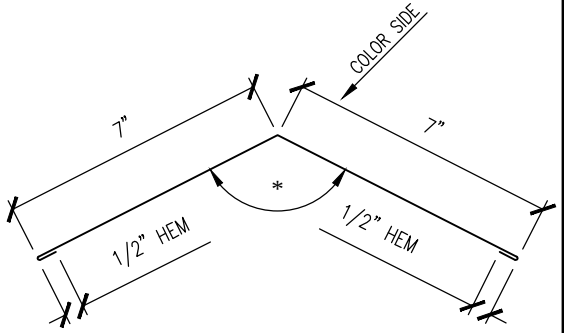

RIDGE/HIP CAP (WS-405H)
* DENOTES ANGLE

GAUGE: _____	COLOR: _____
LENGTH: _____	FINISH: _____
MATERIAL: _____	

Western States Metal Roofing
901 W. Watkins St.
Phoenix, AZ 85007
www.MetalForRoofing.com
www.RustedRoofing.com
www.MetalDeck.com
Phone: (602) 495-0048
Fax: (602) 261-7726
877-PURLINS (787-5467)

FIXED RIDGE/HIP DETAIL

PANEL TYPE: WESTERN LOCK

REV:	DATE:
A	05-20-13

DETAIL #: WSD-D7

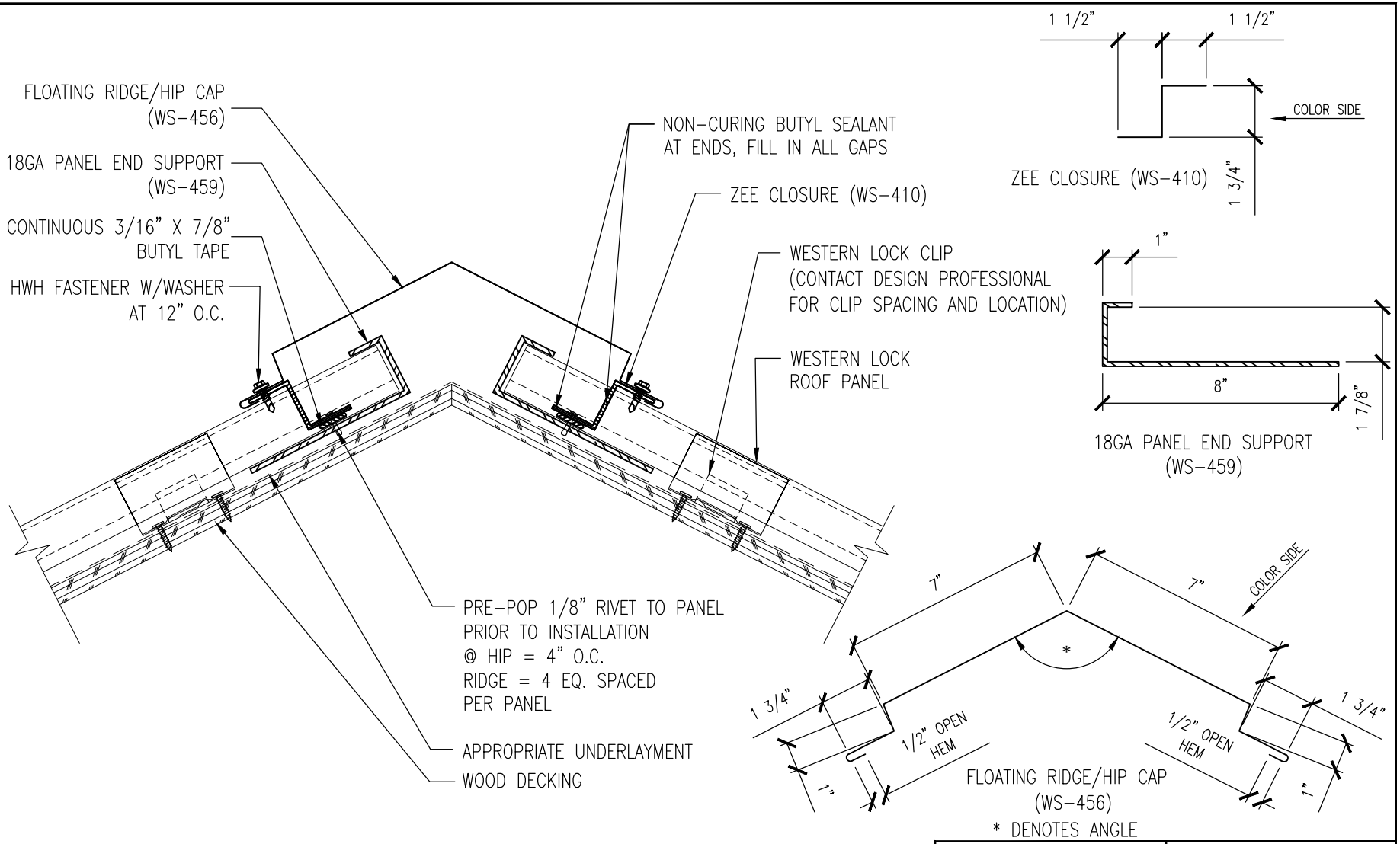

GAUGE: _____	COLOR: _____
LENGTH: _____	FINISH: _____
MATERIAL: _____	

Western States Metal Roofing

901 W. Watkins St.
Phoenix, AZ 85007
www.MetalForRoofing.com
www.RustedRoofing.com
www.MetalDeck.com

Phone: (602) 495-0048
Fax: (602) 261-7726
877-PURLINS (787-5467)

FLOATING RIDGE/HIP DETAIL

PANEL TYPE: WESTERN LOCK

REV:	DATE:
A	05-20-13

DETAIL #: WSD-D8

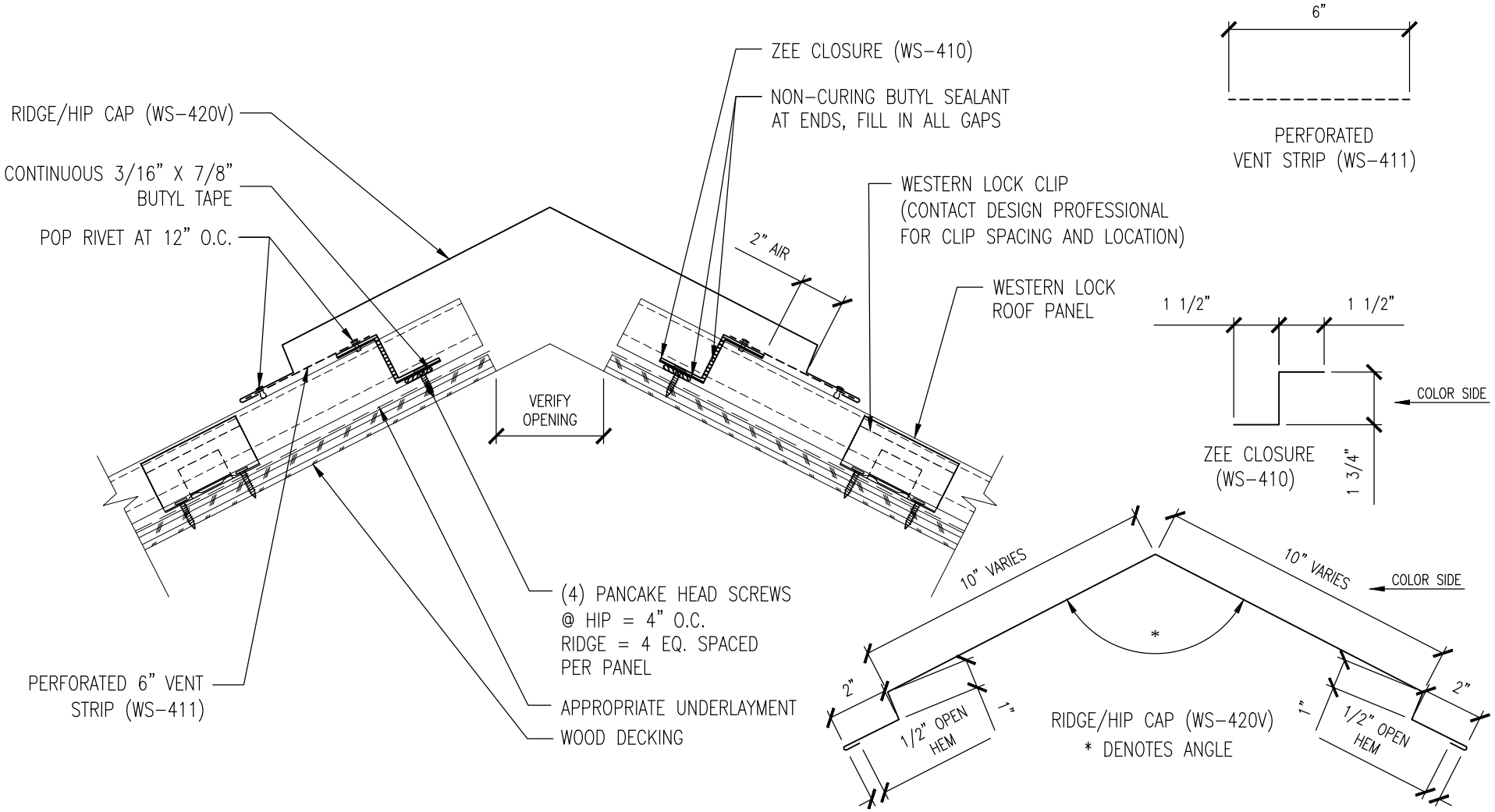

GAUGE: _____	COLOR: _____
LENGTH: _____	FINISH: _____
MATERIAL: _____	

Western States Metal Roofing

901 W. Watkins St.
Phoenix, AZ 85007
www.MetalForRoofing.com
www.RustedRoofing.com
www.MetalDeck.com

Phone: (602) 495-0048
Fax: (602) 261-7726
877-PURLINS (787-5467)

FIXED VENTED RIDGE DETAIL

PANEL TYPE: WESTERN LOCK

REV:	DATE:
A	05-20-13

DETAIL #: WSD-D9

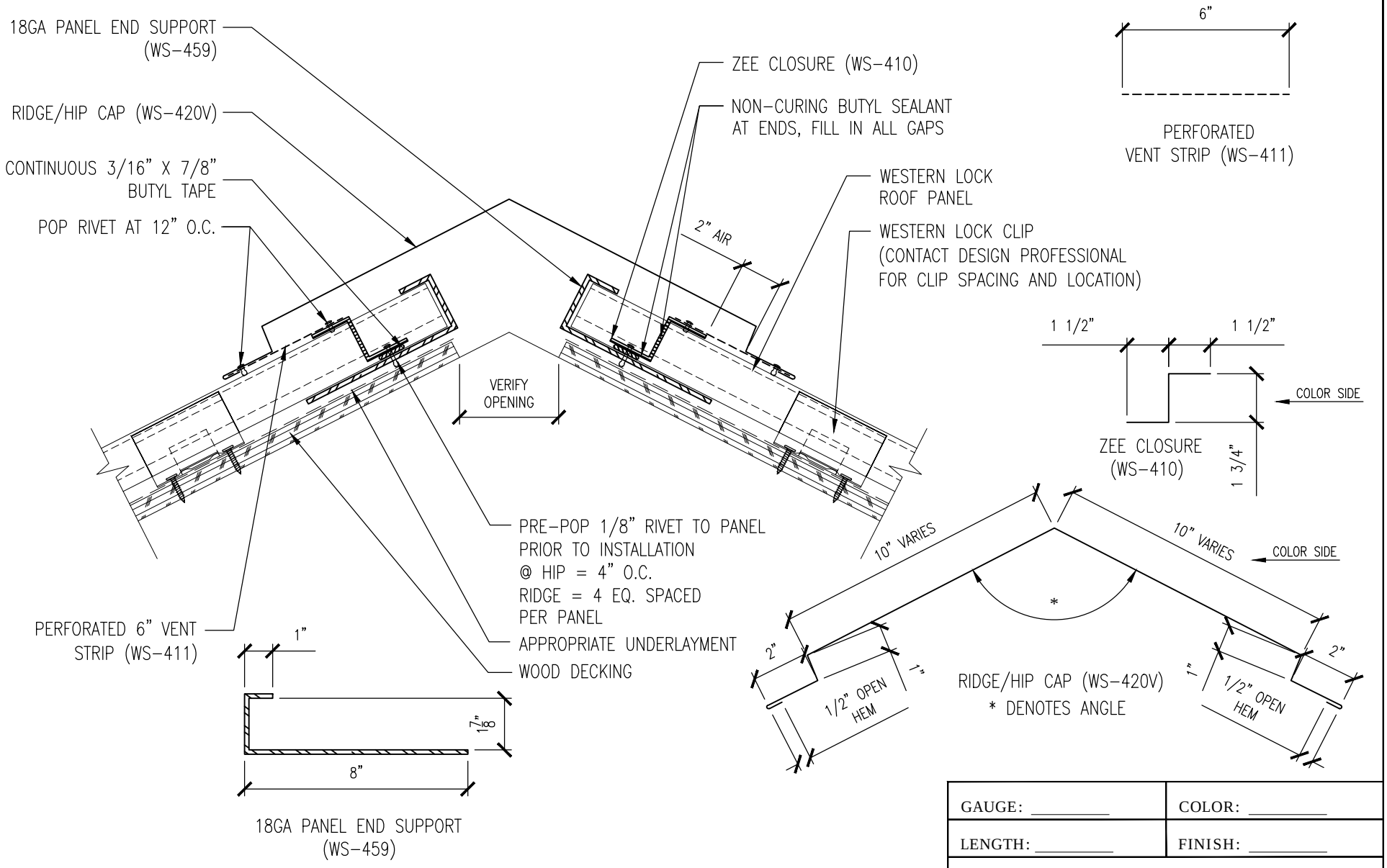

GAUGE: _____	COLOR: _____
LENGTH: _____	FINISH: _____
MATERIAL: _____	

Western States Metal Roofing

901 W. Watkins St.
Phoenix, AZ 85007
www.MetalForRoofing.com
www.RustedRoofing.com
www.MetalDeck.com

Phone: (602) 495-0048
Fax: (602) 261-7726
877-PURLINS (787-5467)

FLOATING VENTED RIDGE DETAIL

PANEL TYPE: WESTERN LOCK

REV:	DATE:
A	05-20-13

DETAIL #: WSD-D10

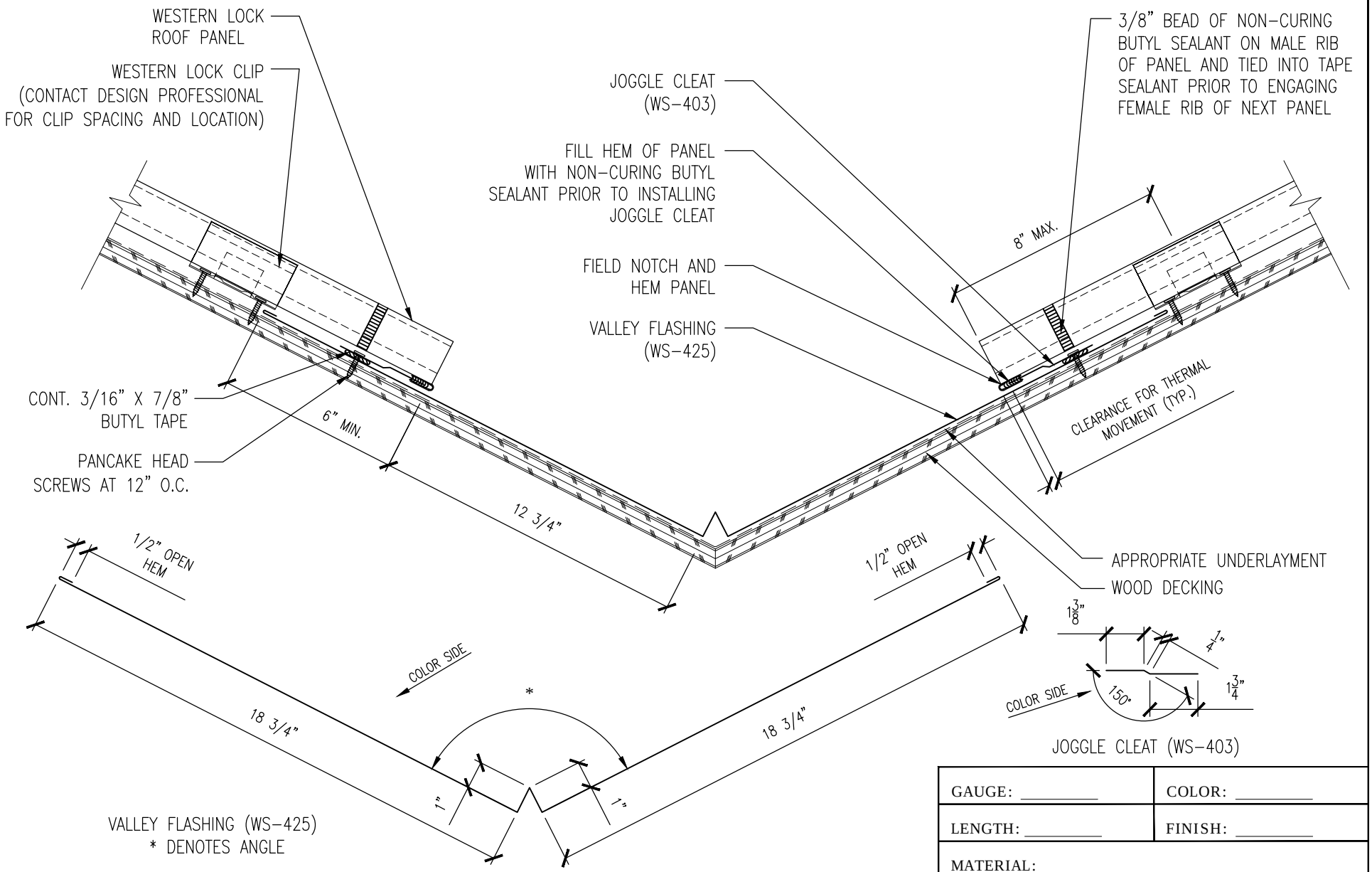

GAUGE: _____	COLOR: _____
LENGTH: _____	FINISH: _____
MATERIAL: _____	

Western States Metal Roofing

901 W. Watkins St.
Phoenix, AZ 85007
www.MetalForRoofing.com
www.RustedRoofing.com
www.MetalDeck.com

Phone: (602) 495-0048
Fax: (602) 261-7726
877-PURLINS (787-5467)

FLOATING VALLEY DETAIL

PANEL TYPE: WESTERN LOCK

REV:	DATE:
A	05-20-13

DETAIL #: WSD-D11

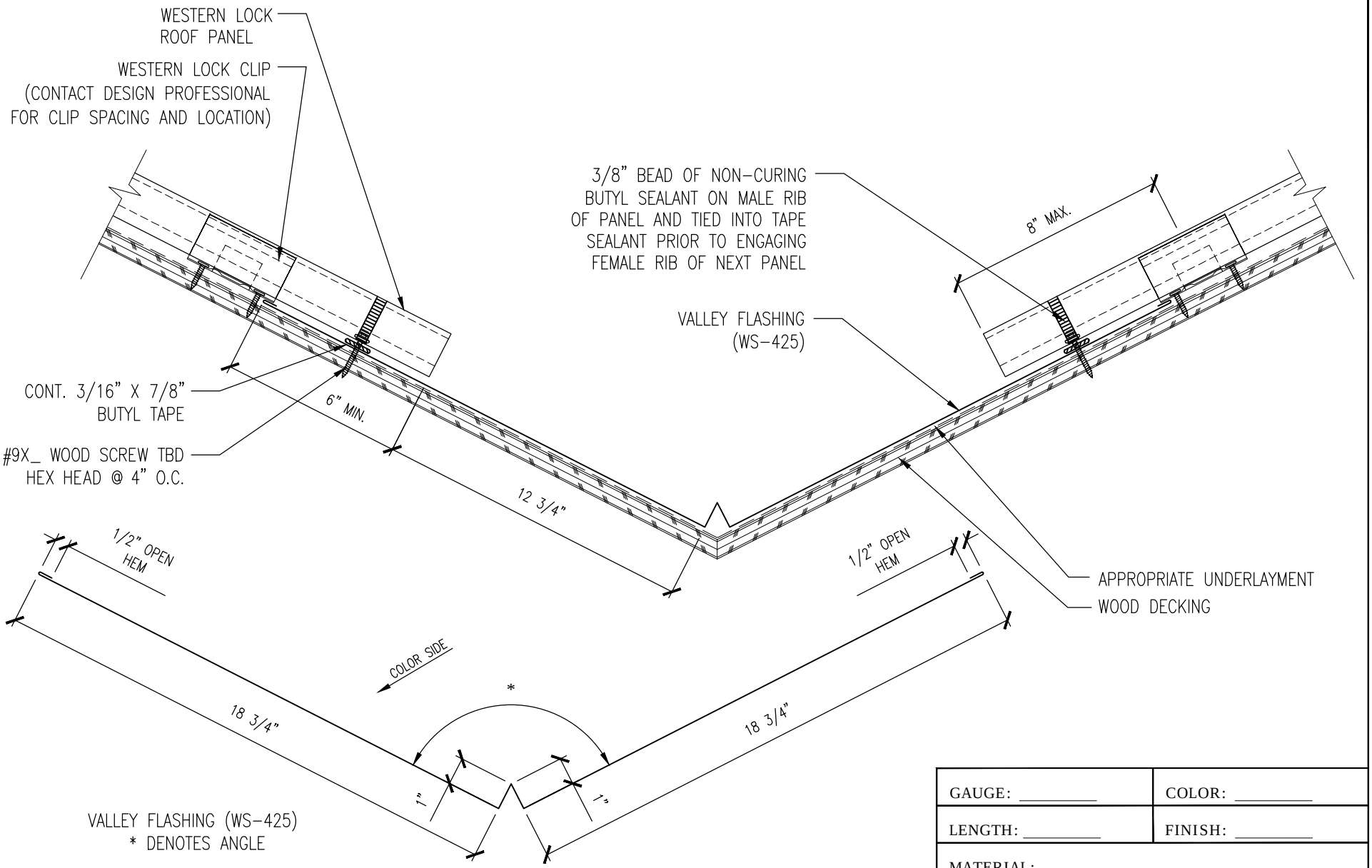

GAUGE: _____	COLOR: _____
LENGTH: _____	FINISH: _____
MATERIAL: _____	

Western States Metal Roofing

901 W. Watkins St.
Phoenix, AZ 85007
www.MetalForRoofing.com
www.RustedRoofing.com
www.MetalDeck.com

Phone: (602) 495-0048
Fax: (602) 261-7726
877-PURLINS (787-5467)

FIXED VALLEY DETAIL

PANEL TYPE: WESTERN LOCK

REV:	DATE:
A	05-20-13

DETAIL #: WSD-D12

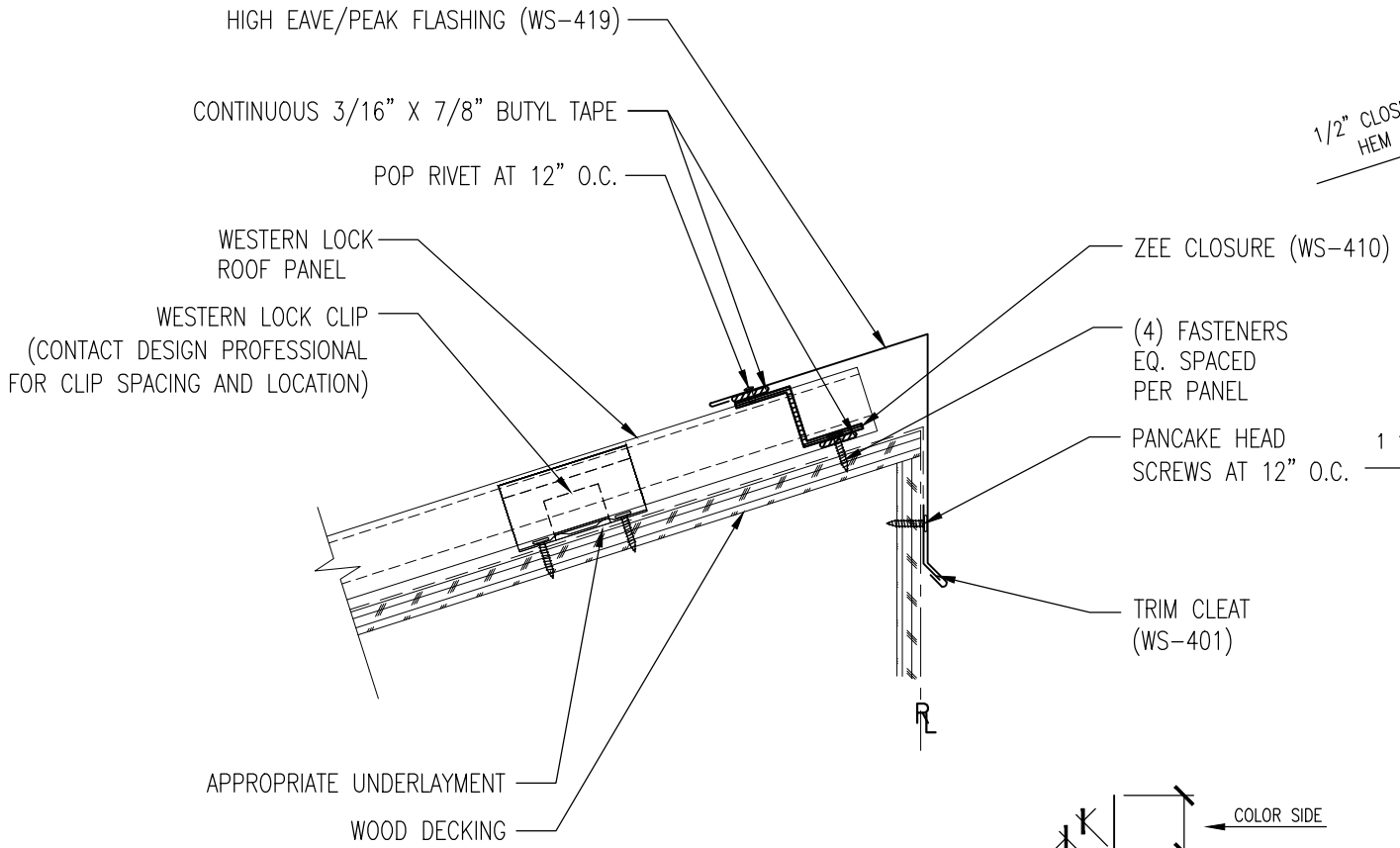

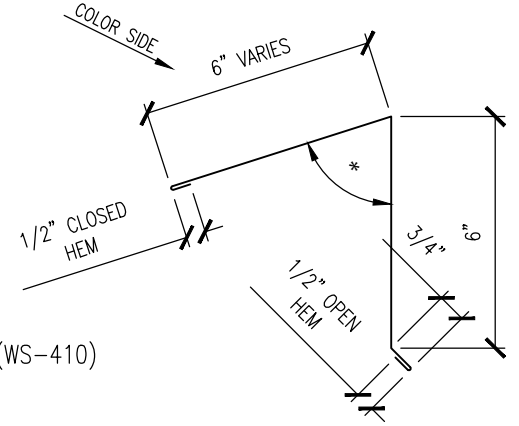

HIGH EAVE/PEAK FLASHING (WS-419)

* DENOTES ANGLE

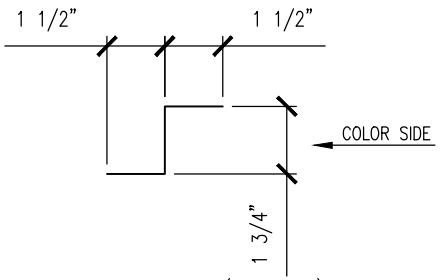

ZEE CLOSURE (WS-410)

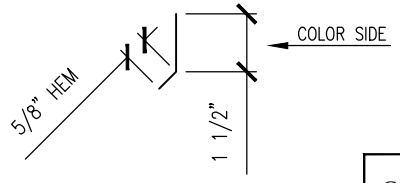

TRIM CLEAT (WS-401)

GAUGE: _____	COLOR: _____
LENGTH: _____	FINISH: _____
MATERIAL: _____	

Western States Metal Roofing

901 W. Watkins St.
Phoenix, AZ 85007
www.MetalForRoofing.com
www.RustedRoofing.com
www.MetalDeck.com

Phone: (602) 495-0048
Fax: (602) 261-7726
877-PURLINS (787-5467)

FIXED HIGH EAVE DETAIL

PANEL TYPE: WESTERN LOCK

REV:	DATE:
A	05-20-13

DETAIL #: WSD-D13

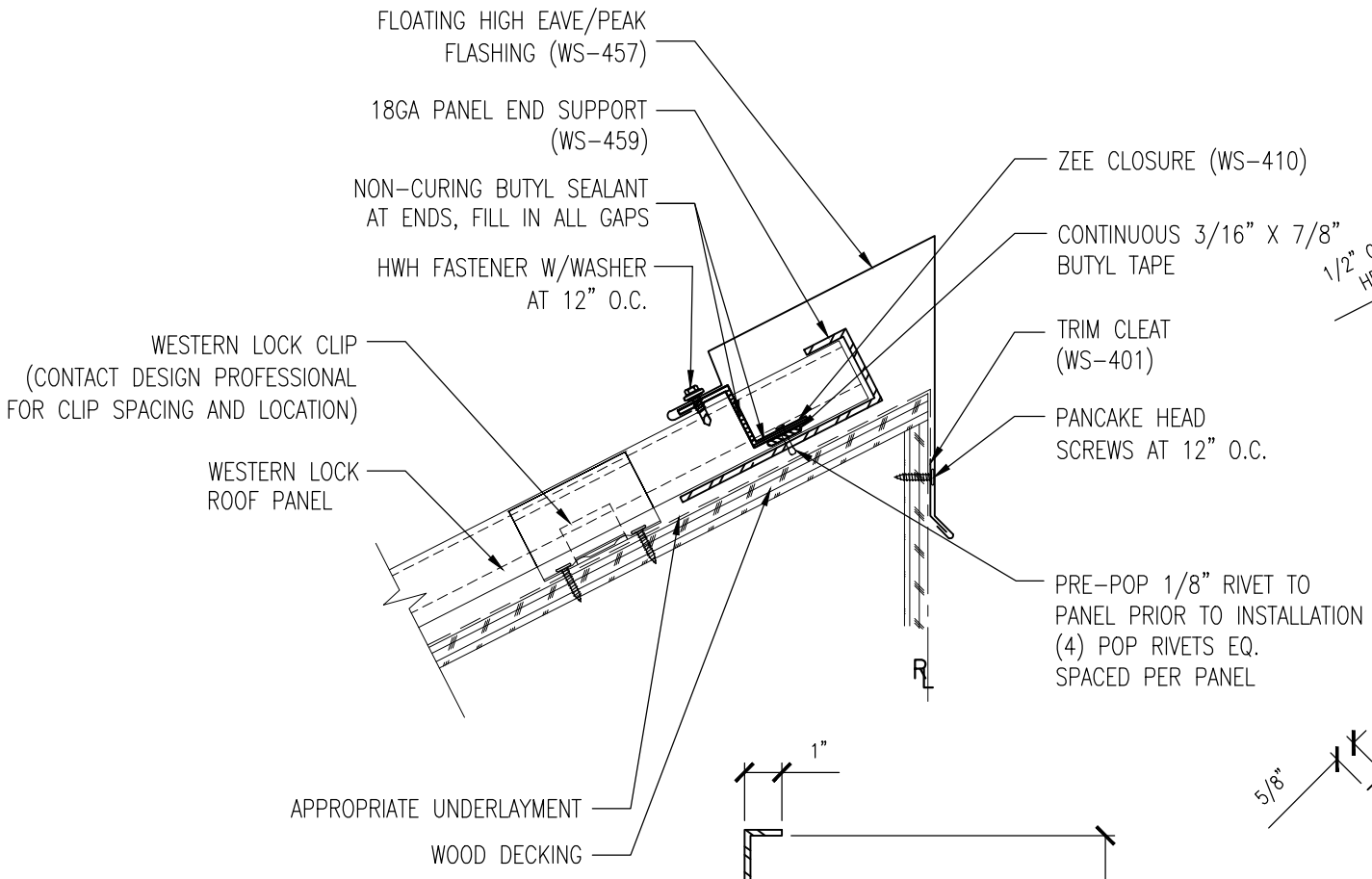

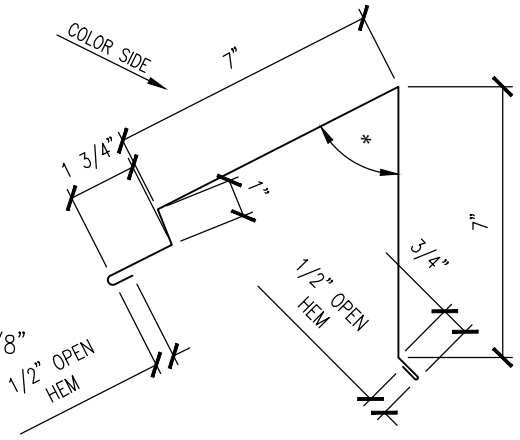

FLOATING HIGH EAVE/PEAK FLASHING (WS-457)
* DENOTES ANGLE

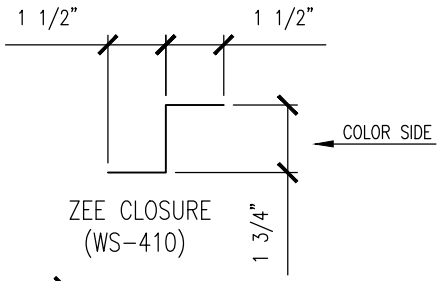

ZEE CLOSURE (WS-410)

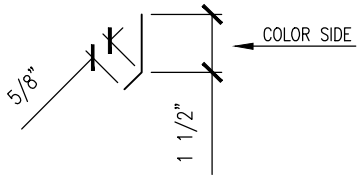

TRIM CLEAT (WS-401)

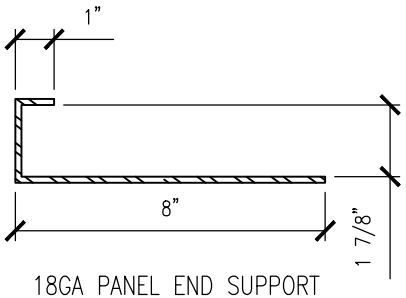

18GA PANEL END SUPPORT (WS-459)

GAUGE: _____	COLOR: _____
LENGTH: _____	FINISH: _____
MATERIAL: _____	

Western States Metal Roofing

901 W. Watkins St.
Phoenix, AZ 85007
www.MetalForRoofing.com
www.RustedRoofing.com
www.MetalDeck.com

Phone: (602) 495-0048
Fax: (602) 261-7726
877-PURLINS (787-5467)

FLOATING HIGH EAVE DETAIL

PANEL TYPE: WESTERN LOCK

REV:	DATE:
A	05-20-13

DETAIL #: WSD-D14

NOTE:
FIELD CUT FIRST AND
LAST PANELS TO EQUAL
WIDTHS.

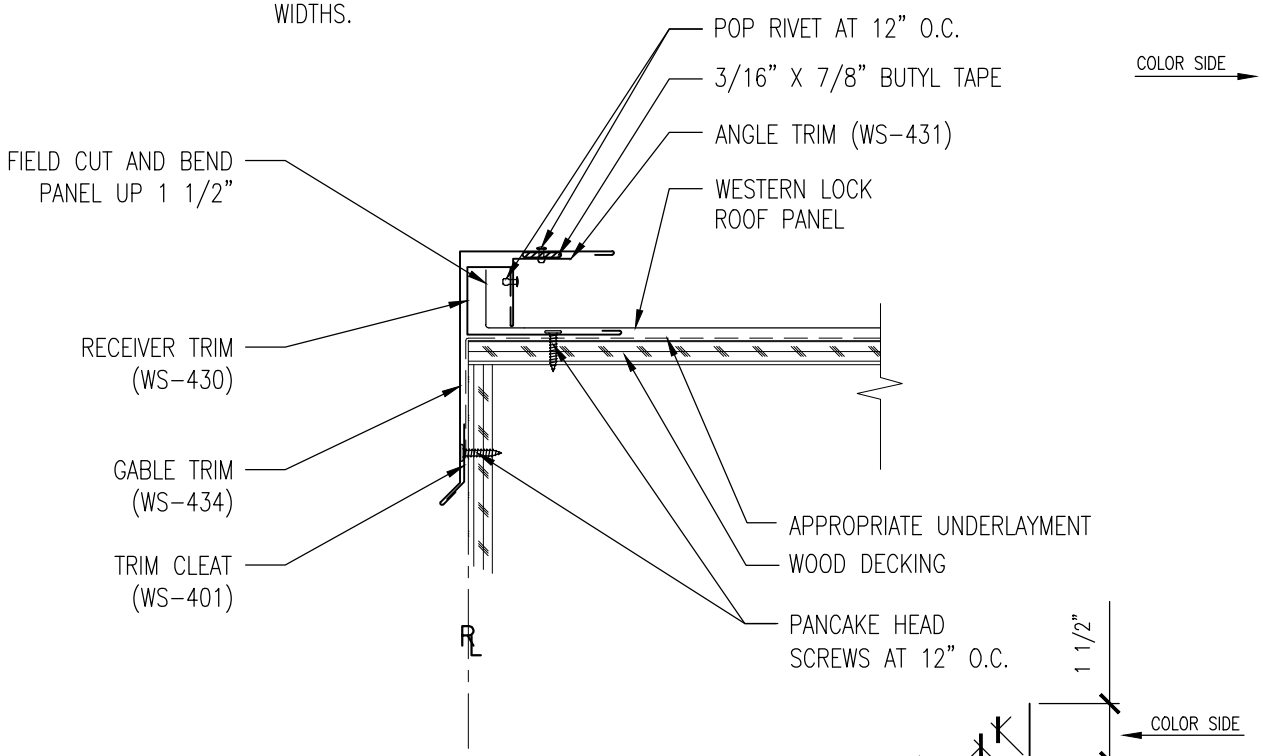

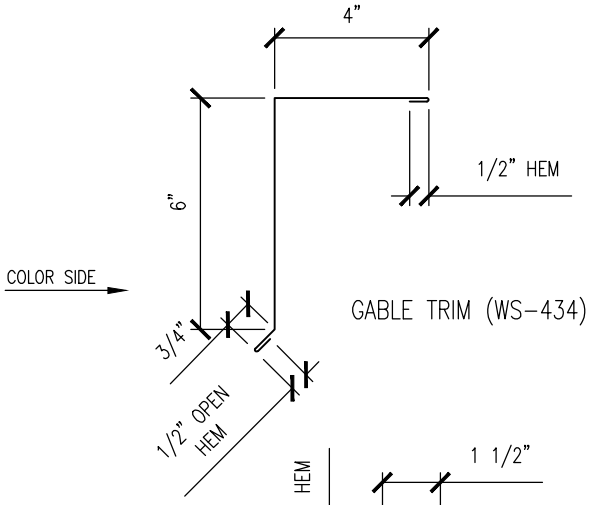

GABLE TRIM (WS-434)

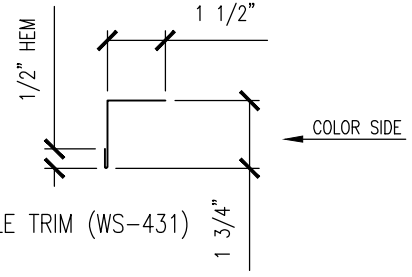

ANGLE TRIM (WS-431)

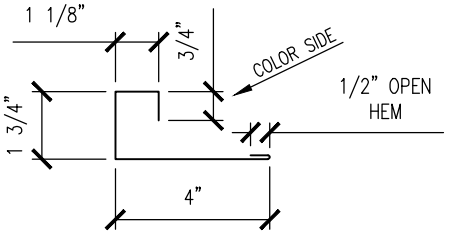

RECEIVER TRIM (WS-430)

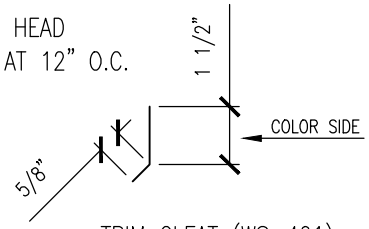

TRIM CLEAT (WS-401)

GAUGE: _____	COLOR: _____
LENGTH: _____	FINISH: _____
MATERIAL: _____	

Western States Metal Roofing

901 W. Watkins St.
Phoenix, AZ 85007
www.MetalForRoofing.com
www.RustedRoofing.com
www.MetalDeck.com

Phone: (602) 495-0048
Fax: (602) 261-7726
877-PURLINS (787-5467)

4 PIECE GABLE DETAIL

PANEL TYPE:
WESTERN LOCK

REV:	DATE:
A	05-20-13

DETAIL #: WSD-D15

NOTE:
FIELD CUT FIRST AND
LAST PANELS TO EQUAL
WIDTHS.

NOTE:
THIS TRIM REQUIRES SLIDING
UP FROM EAVE

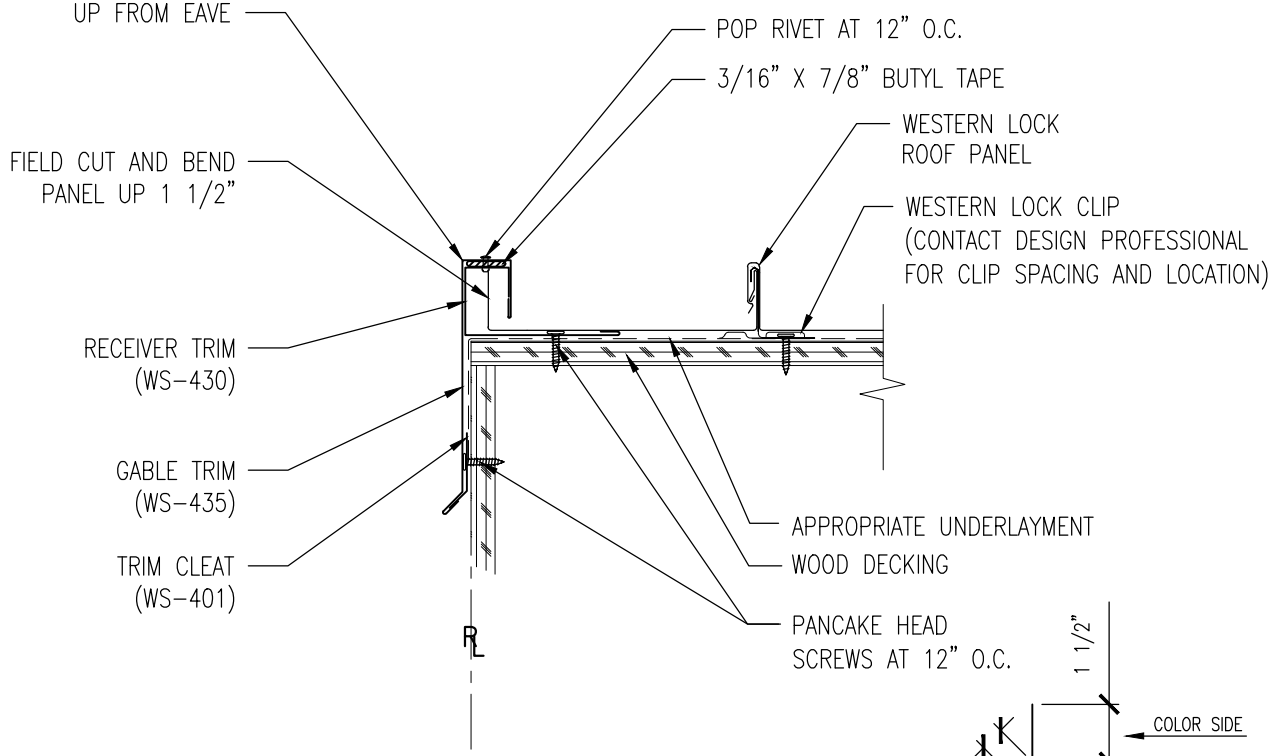

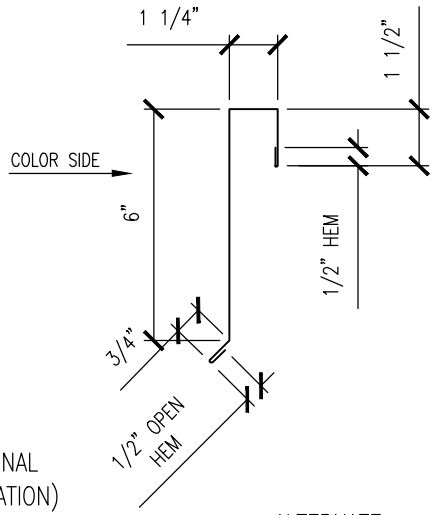

ALTERNATE
GABLE TRIM (WS-435)

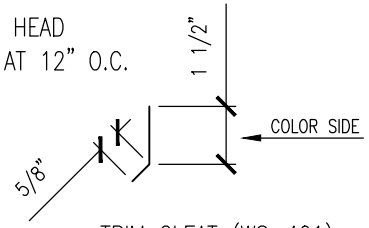

TRIM CLEAT (WS-401)

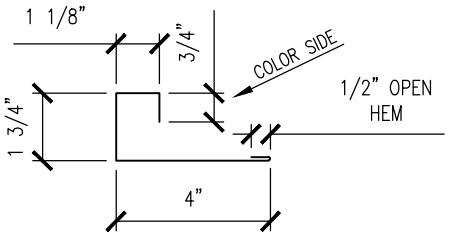

RECEIVER TRIM (WS-430)

GAUGE: _____	COLOR: _____
LENGTH: _____	FINISH: _____
MATERIAL: _____	

Western States Metal Roofing
901 W. Watkins St.
Phoenix, AZ 85007
www.MetalForRoofing.com
www.RustedRoofing.com
www.MetalDeck.com
Phone: (602) 495-0048
Fax: (602) 261-7726
877-PURLINS (787-5467)

3 PIECE GABLE DETAIL

PANEL TYPE:
WESTERN LOCK

REV:	DATE:
A	05-20-13

DETAIL #:
WSD-D15A

NOTE:
FIELD CUT FIRST AND LAST PANELS TO EQUAL WIDTHS.

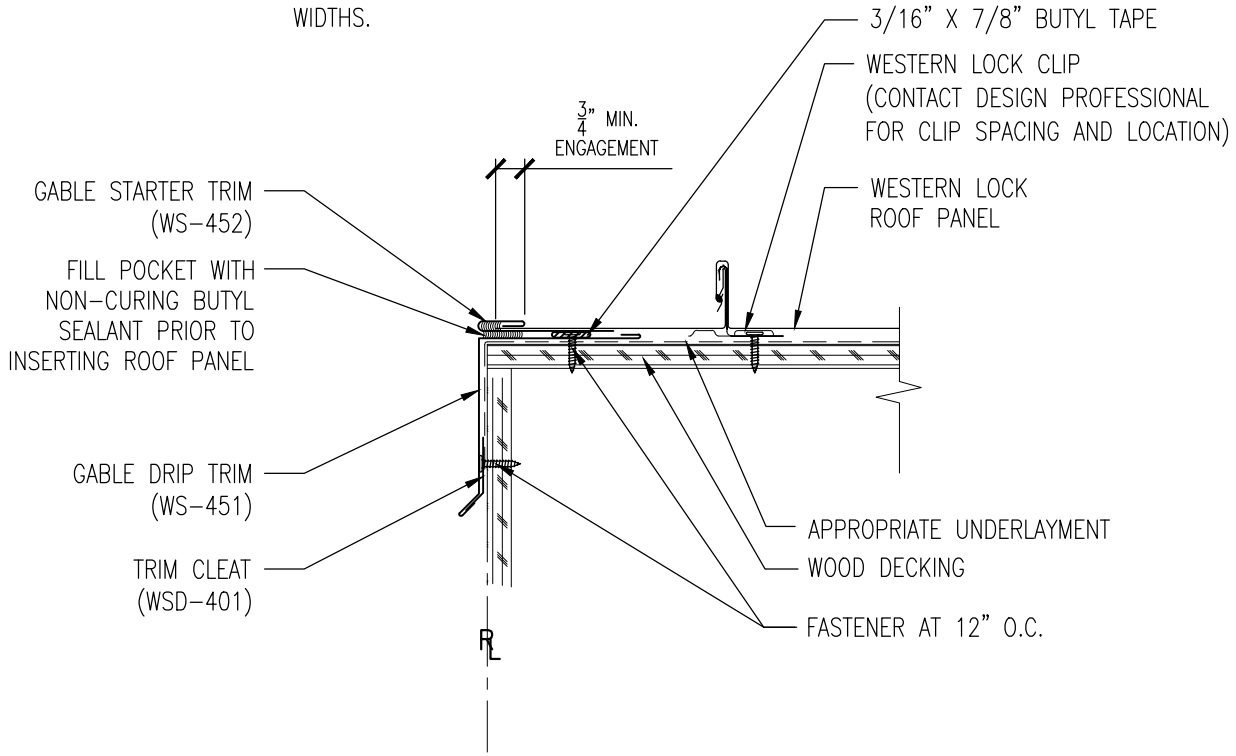

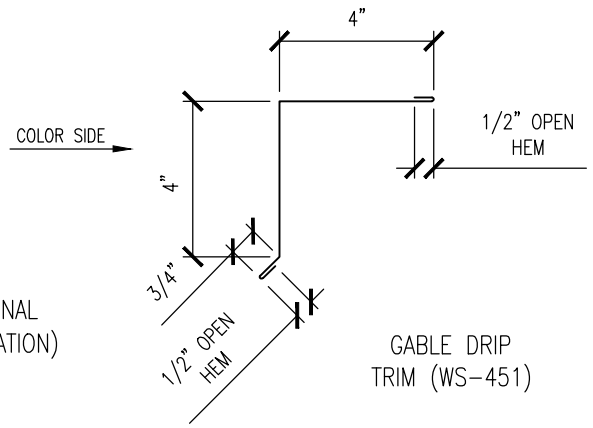

GABLE DRIP TRIM (WS-451)

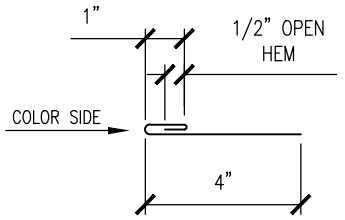

GABLE STARTER TRIM (WS-452)

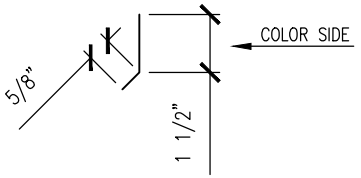

TRIM CLEAT (WS-401)

GAUGE: _____	COLOR: _____
LENGTH: _____	FINISH: _____
MATERIAL: _____	

Western States Metal Roofing
901 W. Watkins St.
Phoenix, AZ 85007
www.MetalForRoofing.com
www.RustedRoofing.com
www.MetalDeck.com
Phone: (602) 495-0048
Fax: (602) 261-7726
877-PURLINS (787-5467)

STARTER GABLE DETAIL

PANEL TYPE: WESTERN LOCK

REV:	DATE:
A	05-20-13

DETAIL #: WSD-D15B

NOTE:
FIELD CUT FIRST AND
LAST PANELS TO EQUAL
WIDTHS.

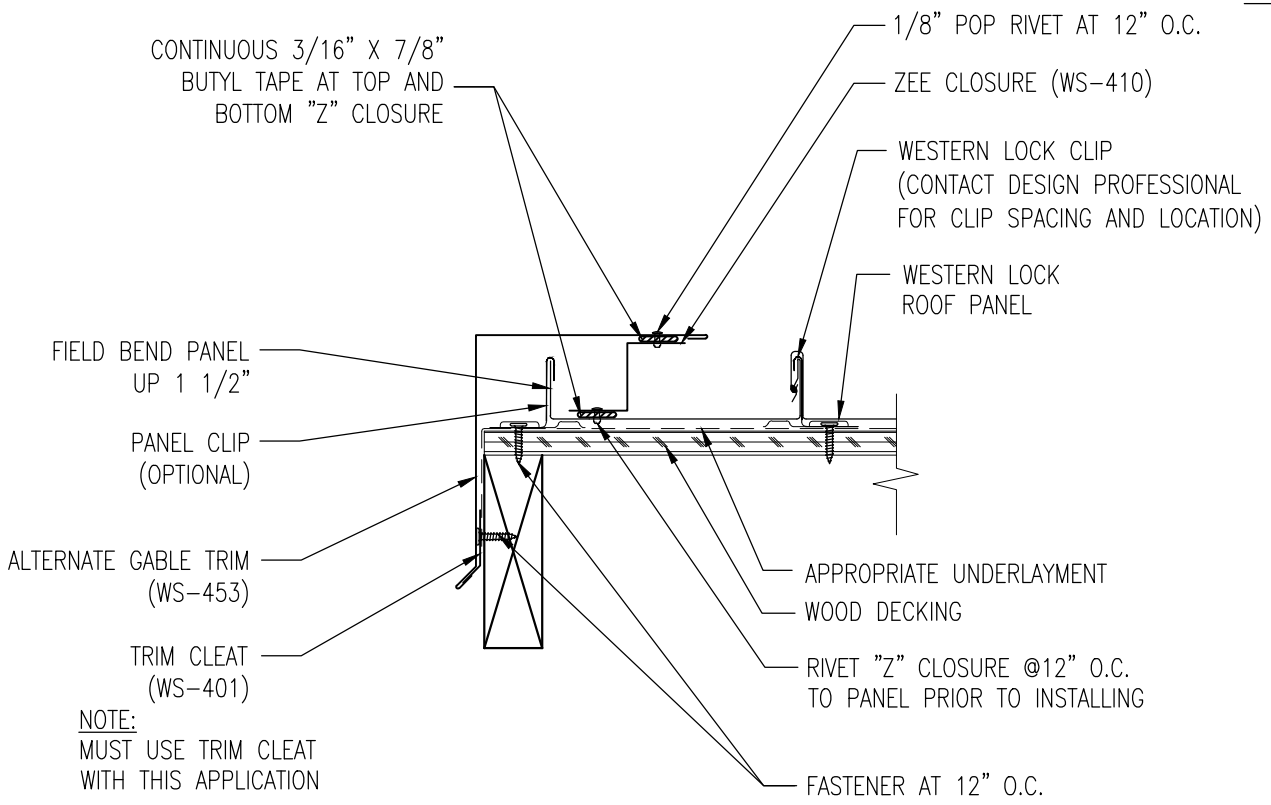

NOTE:
MUST USE TRIM CLEAT
WITH THIS APPLICATION

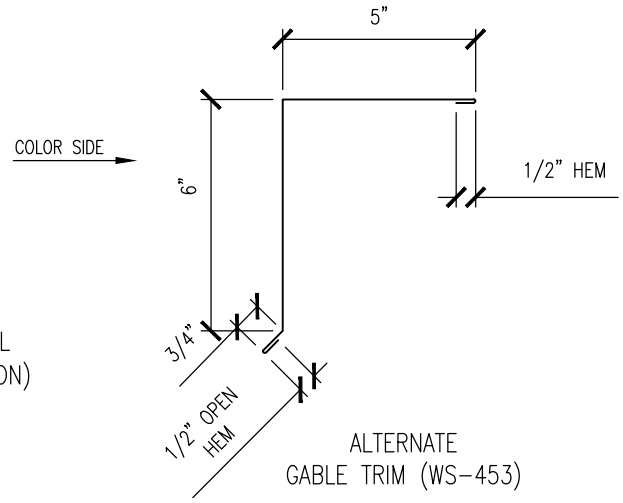

ALTERNATE
GABLE TRIM (WS-453)

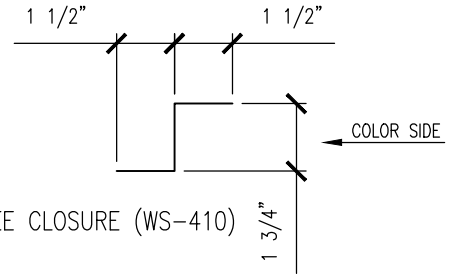

ZEE CLOSURE (WS-410)

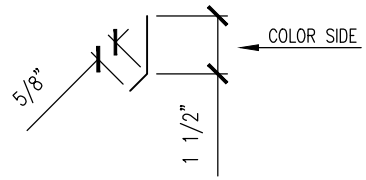

TRIM CLEAT (WD-401)

GAUGE: _____	COLOR: _____
LENGTH: _____	FINISH: _____
MATERIAL: _____	

Western States Metal Roofing

901 W. Watkins St.
Phoenix, AZ 85007
www.MetalForRoofing.com
www.RustedRoofing.com
www.MetalDeck.com

Phone: (602) 495-0048
Fax: (602) 261-7726
877-PURLINS (787-5467)

ALTERNATE GABLE
DETAIL

PANEL TYPE:
WESTERN LOCK

REV:	DATE:
A	05-20-13

DETAIL #:
WSD-D15C

NOTE:
FIELD CUT FIRST AND
LAST PANELS TO EQUAL
WIDTHS.

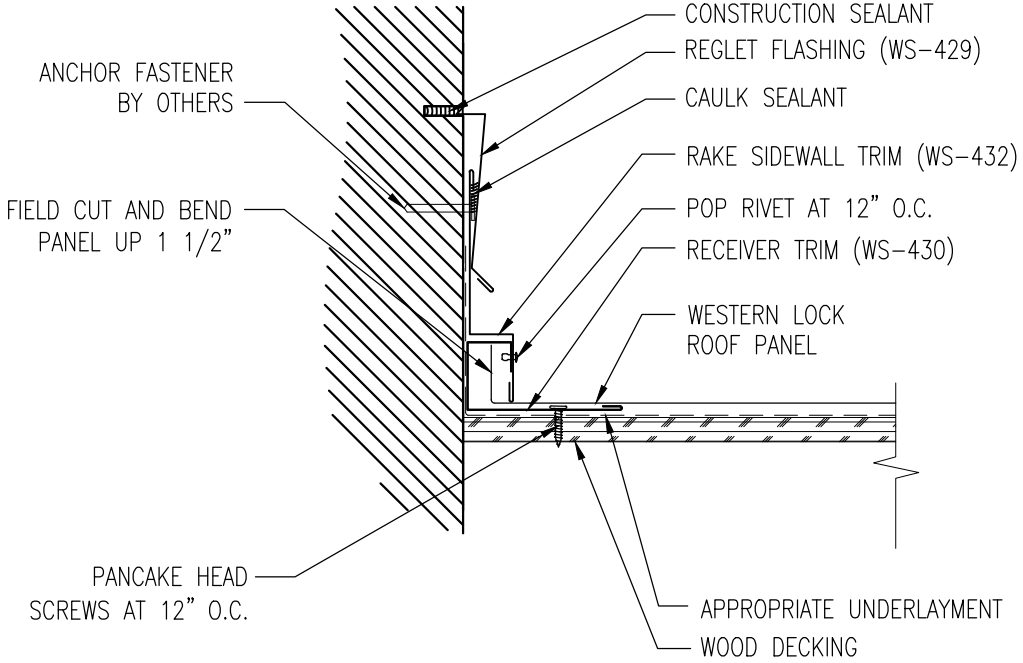

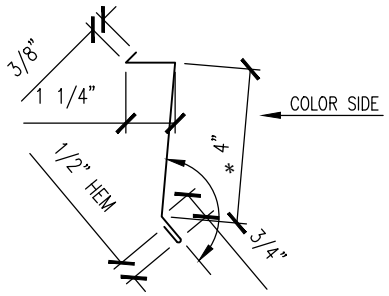

REGLET FLASHING (WS-429)

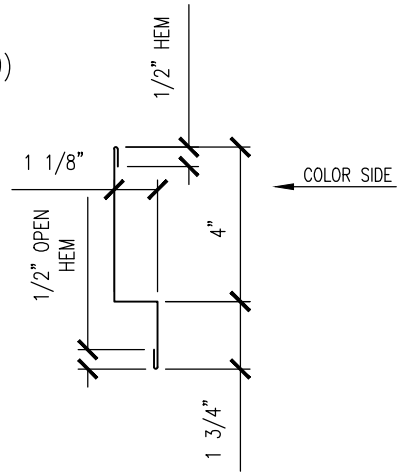

RAKE SIDEWALL TRIM (WS-432)

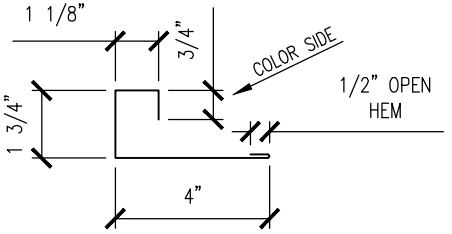

RECEIVER TRIM (WS-430)

GAUGE: _____	COLOR: _____
LENGTH: _____	FINISH: _____
MATERIAL: _____	

Western States Metal Roofing

901 W. Watkins St.
Phoenix, AZ 85007
www.MetalForRoofing.com
www.RustedRoofing.com
www.MetalDeck.com

Phone: (602) 495-0048
Fax: (602) 261-7726
877-PURLINS (787-5467)

RAKE DETAIL

PANEL TYPE:
WESTERN LOCK

REV:	DATE:
A	05-20-13

DETAIL #: WSD-D16

NOTE:
FIELD CUT FIRST AND LAST PANELS TO EQUAL WIDTHS.

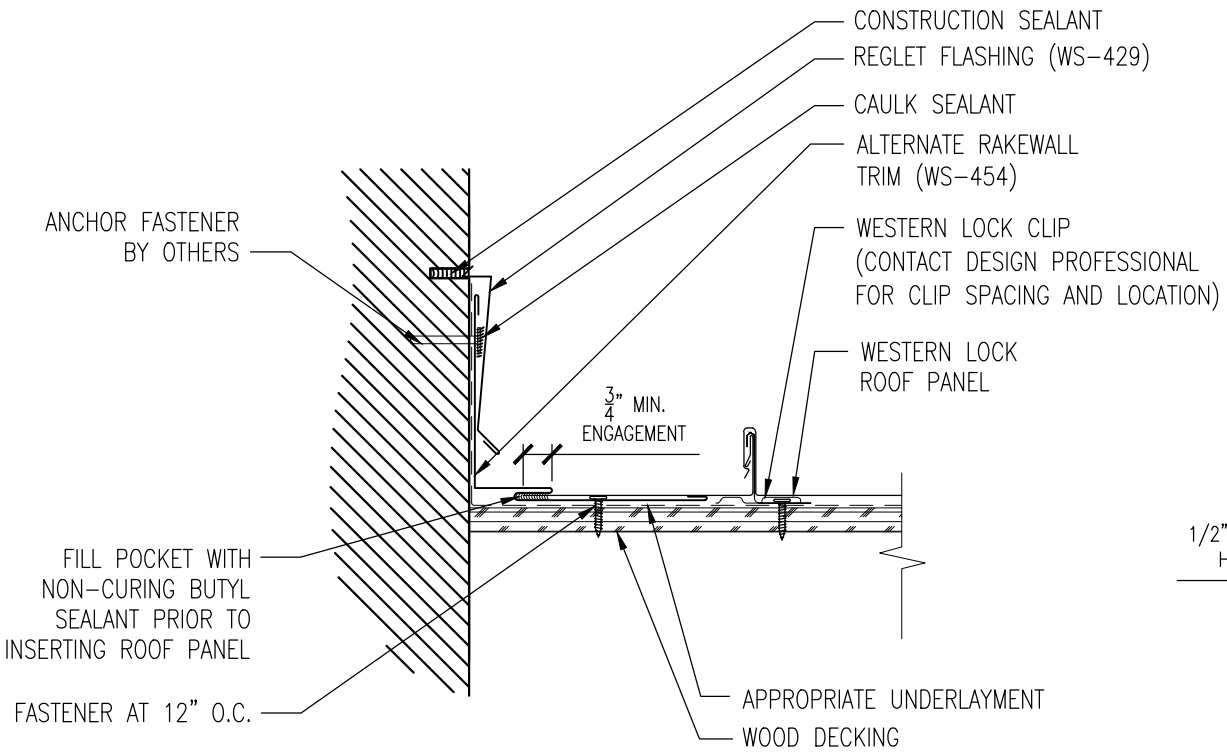

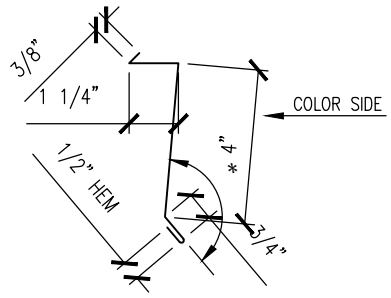

REGLET FLASHING (WS-429)

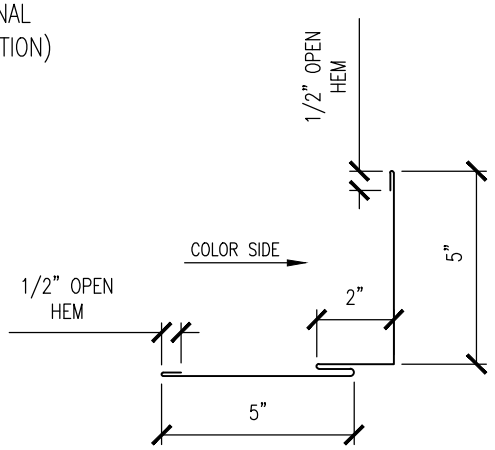

ALTERNATE RAKEWALL TRIM (WS-454)

GAUGE: _____	COLOR: _____
LENGTH: _____	FINISH: _____
MATERIAL: _____	

Western States Metal Roofing
901 W. Watkins St.
Phoenix, AZ 85007
www.MetalForRoofing.com
www.RustedRoofing.com
www.MetalDeck.com
Phone: (602) 495-0048
Fax: (602) 261-7726
877-PURLINS (787-5467)

ALTERNATE RAKEWALL DETAIL

PANEL TYPE: WESTERN LOCK

REV:	DATE:
A	05-20-13

DETAIL #: WSD-D16A

NOTE:
FIELD CUT FIRST AND LAST PANELS TO EQUAL WIDTHS.

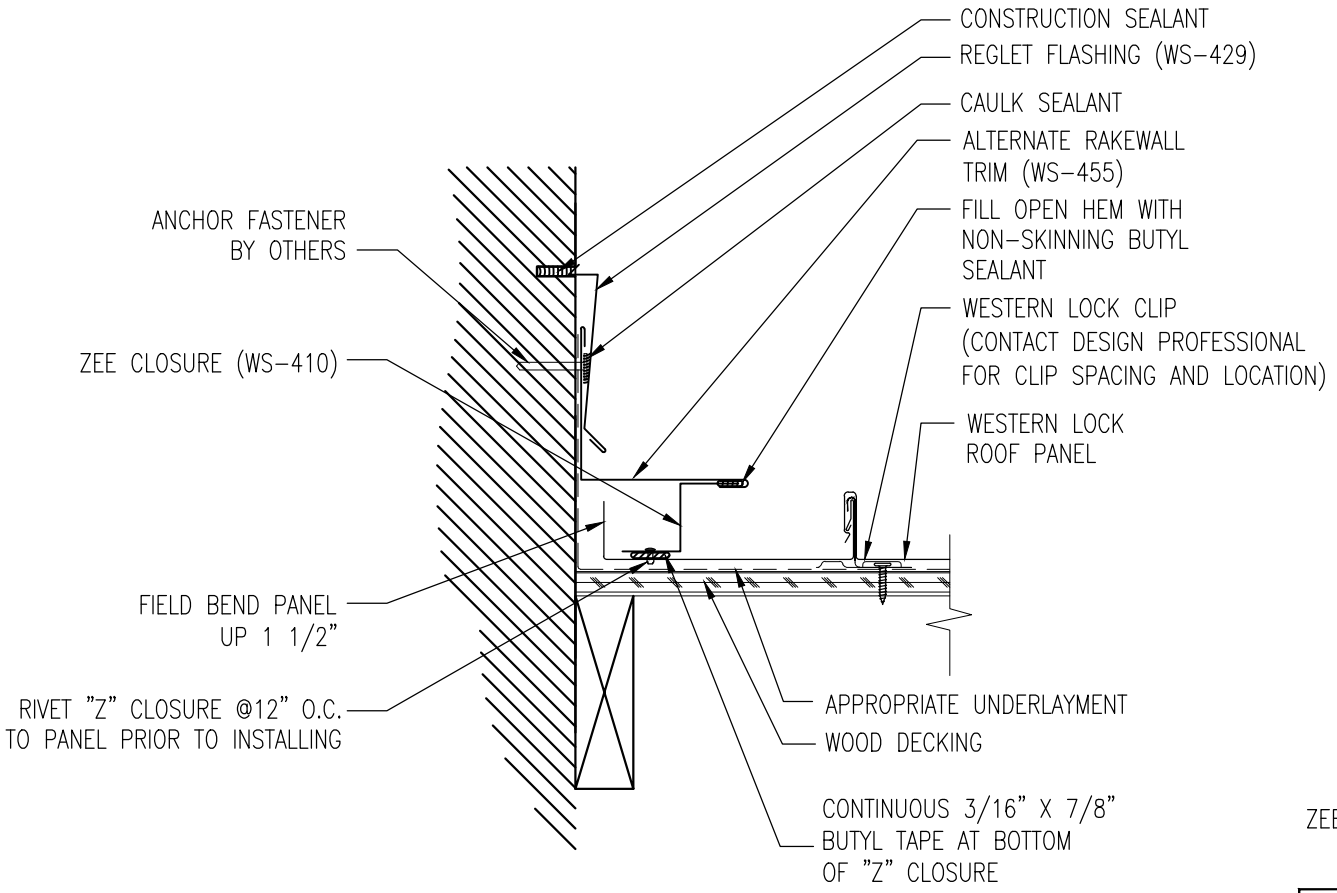

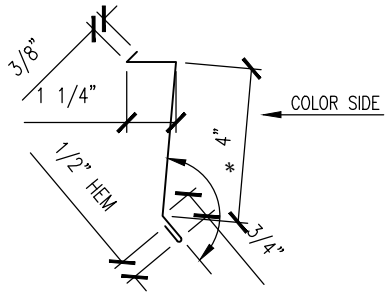

REGLET FLASHING (WS-429)

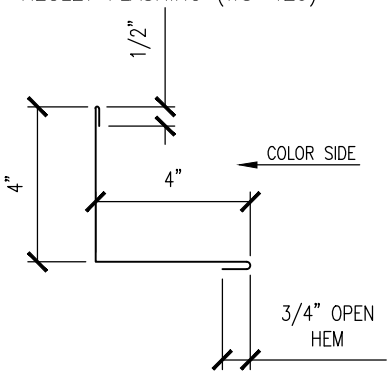

ALTERNATE RAKEWALL TRIM (WS-455)

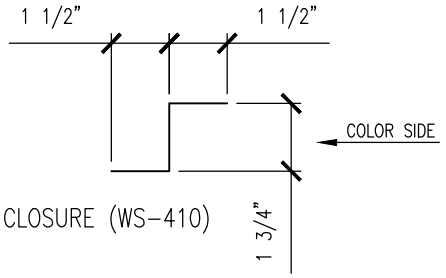

ZEE CLOSURE (WS-410)

GAUGE: _____	COLOR: _____
LENGTH: _____	FINISH: _____
MATERIAL: _____	

Western States Metal Roofing
901 W. Watkins St.
Phoenix, AZ 85007
www.MetalForRoofing.com
www.RustedRoofing.com
www.MetalDeck.com
Phone: (602) 495-0048
Fax: (602) 261-7726
877-PURLINS (787-5467)

ZEE CLOSURE ALTERNATE RAKEWALL DETAIL

PANEL TYPE: WESTERN LOCK

REV:	DATE:
A	05-20-13

DETAIL #: WSD-D16B

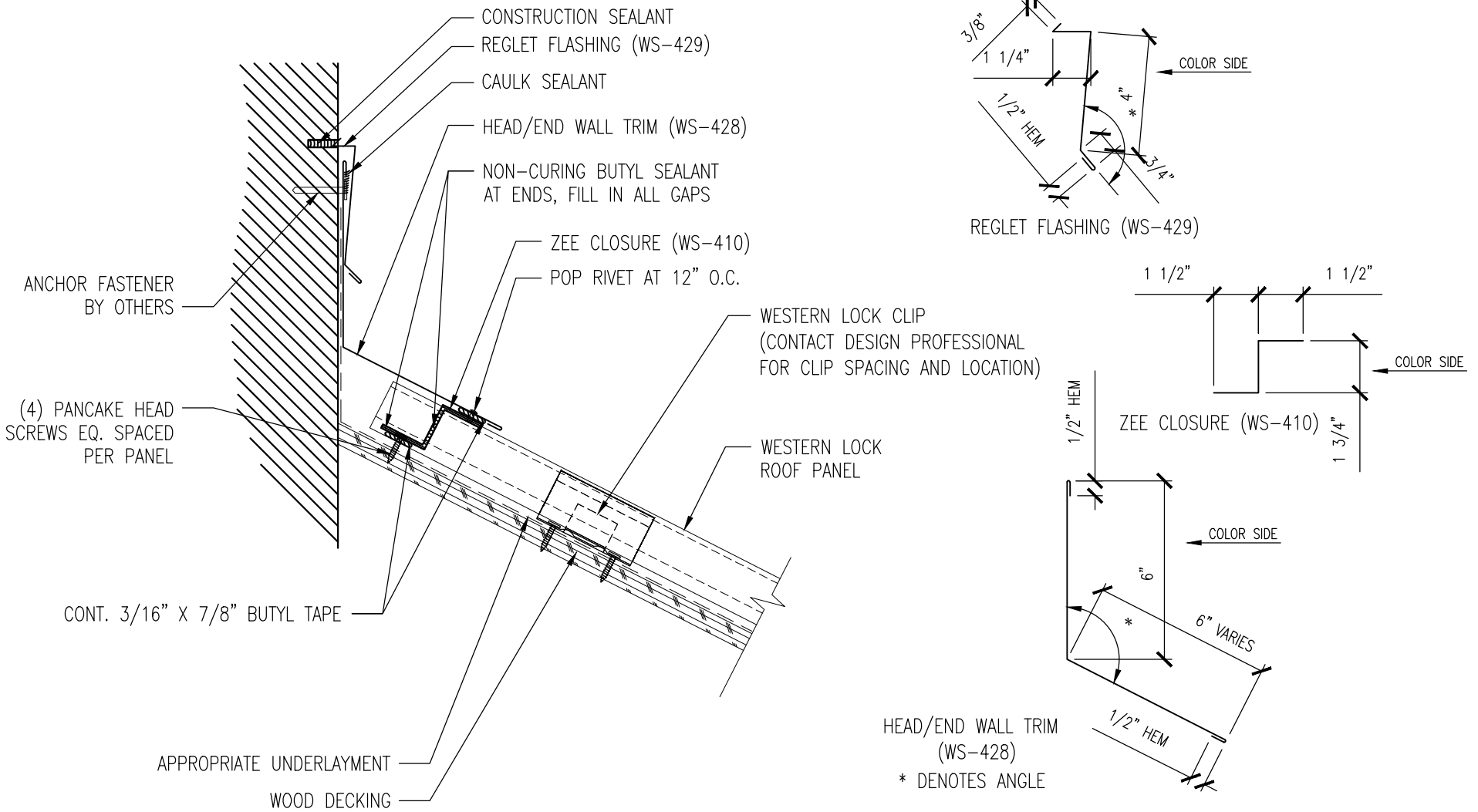

GAUGE: _____	COLOR: _____
LENGTH: _____	FINISH: _____
MATERIAL: _____	

Western States Metal Roofing

901 W. Watkins St.
Phoenix, AZ 85007
www.MetalForRoofing.com
www.RustedRoofing.com
www.MetalDeck.com

Phone: (602) 495-0048
Fax: (602) 261-7726
877-PURLINS (787-5467)

FIXED END WALL/ HEAD WALL DETAIL

PANEL TYPE: WESTERN LOCK

REV:	DATE:
A	05-20-13

DETAIL #: WSD-D17

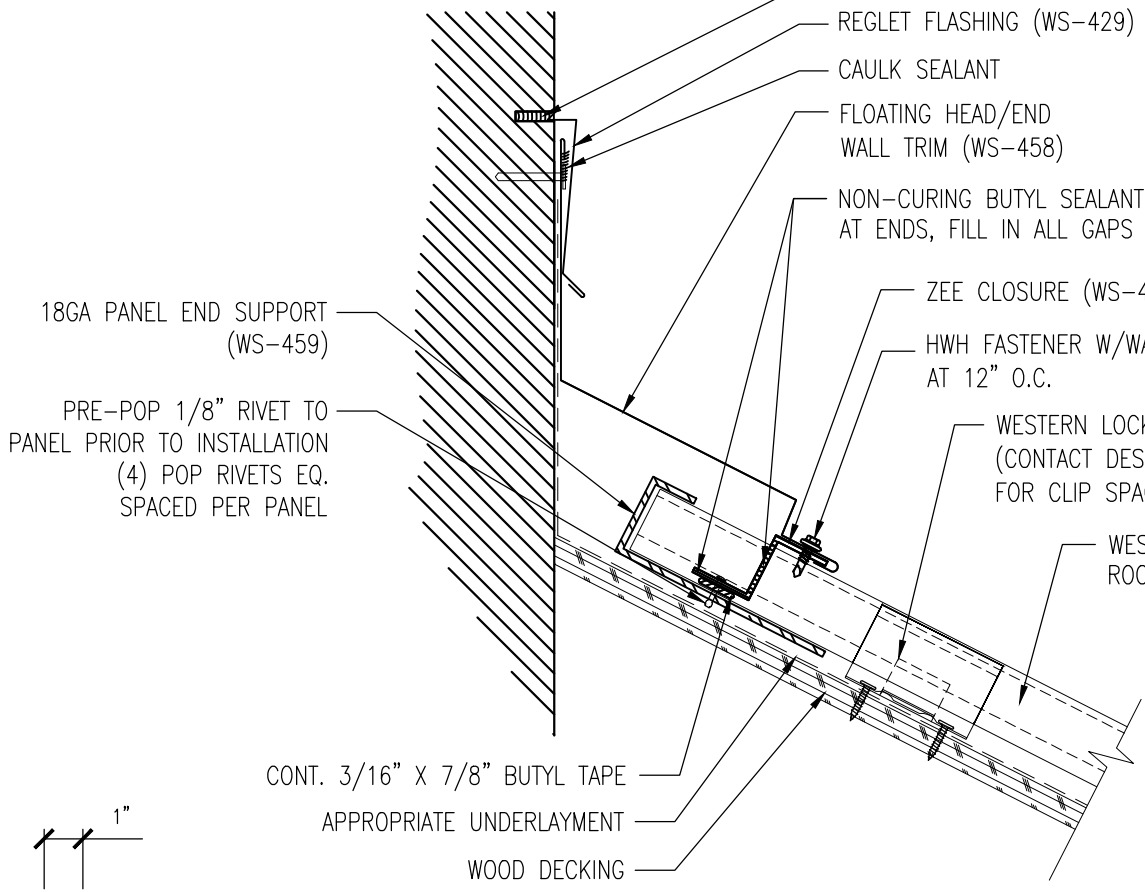

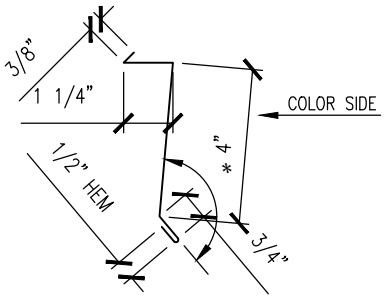

REGLET FLASHING (WS-429)

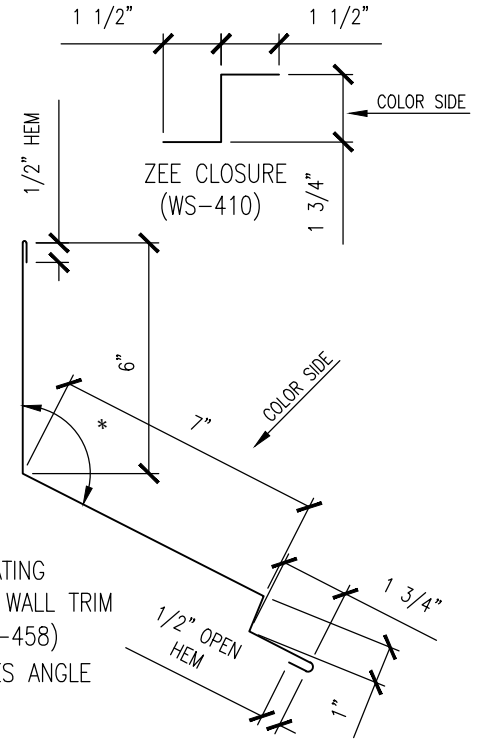

ZEE CLOSURE
(WS-410)

FLOATING
HEAD/END WALL TRIM
(WS-458)
* DENOTES ANGLE

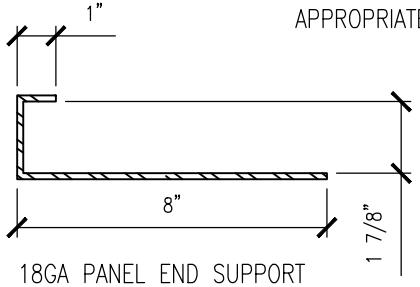

18GA PANEL END SUPPORT
(WS-459)

GAUGE: _____	COLOR: _____
LENGTH: _____	FINISH: _____
MATERIAL: _____	

Western States Metal Roofing

901 W. Watkins St.
Phoenix, AZ 85007
www.MetalForRoofing.com
www.RustedRoofing.com
www.MetalDeck.com

Phone: (602) 495-0048
Fax: (602) 261-7726
877-PURLINS (787-5467)

FLOATING HEAD/ END WALL DETAIL

A	05-20-13
REV:	DATE:

PANEL TYPE:
WESTERN LOCK

DETAIL #:
WSD-D18

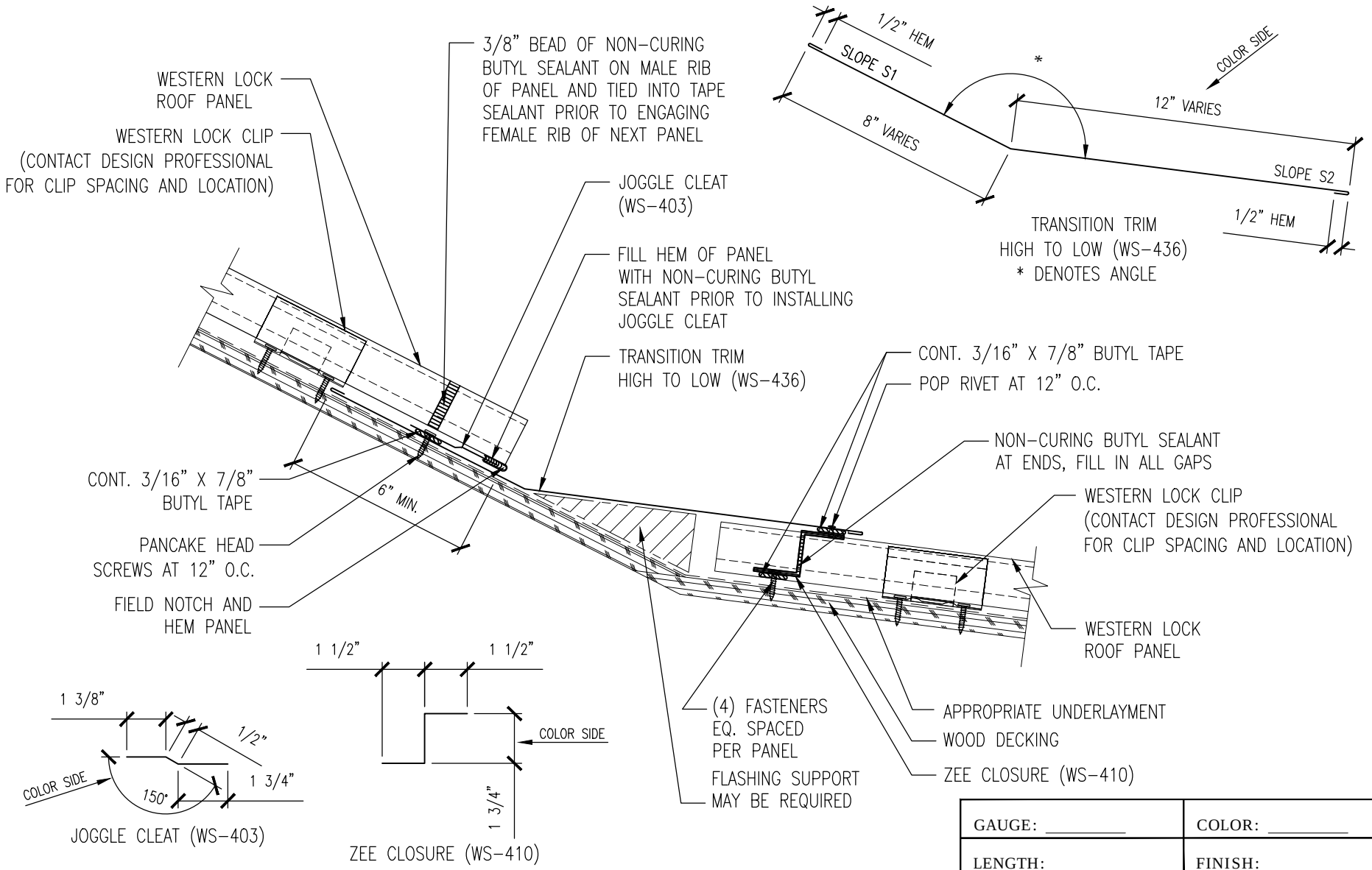

GAUGE: _____	COLOR: _____
LENGTH: _____	FINISH: _____
MATERIAL: _____	

Western States Metal Roofing

901 W. Watkins St.
Phoenix, AZ 85007
www.MetalForRoofing.com
www.RustedRoofing.com
www.MetalDeck.com

Phone: (602) 495-0048
Fax: (602) 261-7726
877-PURLINS (787-5467)

HIGH TO LOW TRANSITION DETAIL

PANEL TYPE: WESTERN LOCK

REV:	DATE:
A	05-20-13

DETAIL #: WSD-D19

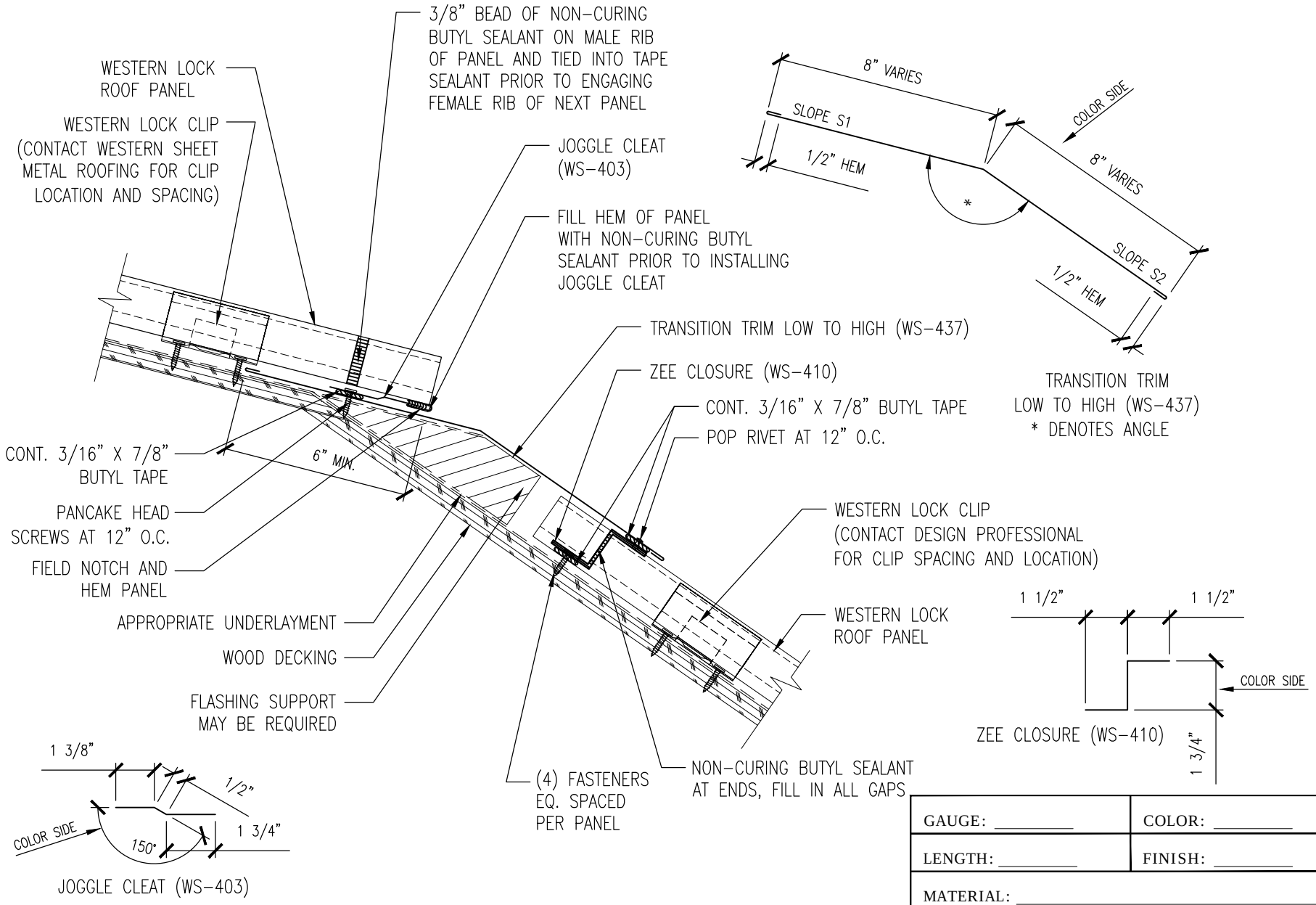

GAUGE: _____	COLOR: _____
LENGTH: _____	FINISH: _____
MATERIAL: _____	

Western States Metal Roofing
901 W. Watkins St.
Phoenix, AZ 85007
www.MetalForRoofing.com
www.RustedRoofing.com
www.MetalDeck.com
Phone: (602) 495-0048
Fax: (602) 261-7726
877-PURLINS (787-5467)

LOW TO HIGH TRANSITION DETAIL

PANEL TYPE: WESTERN LOCK

REV:	DATE:
A	05-20-13

DETAIL #: WSD-D20

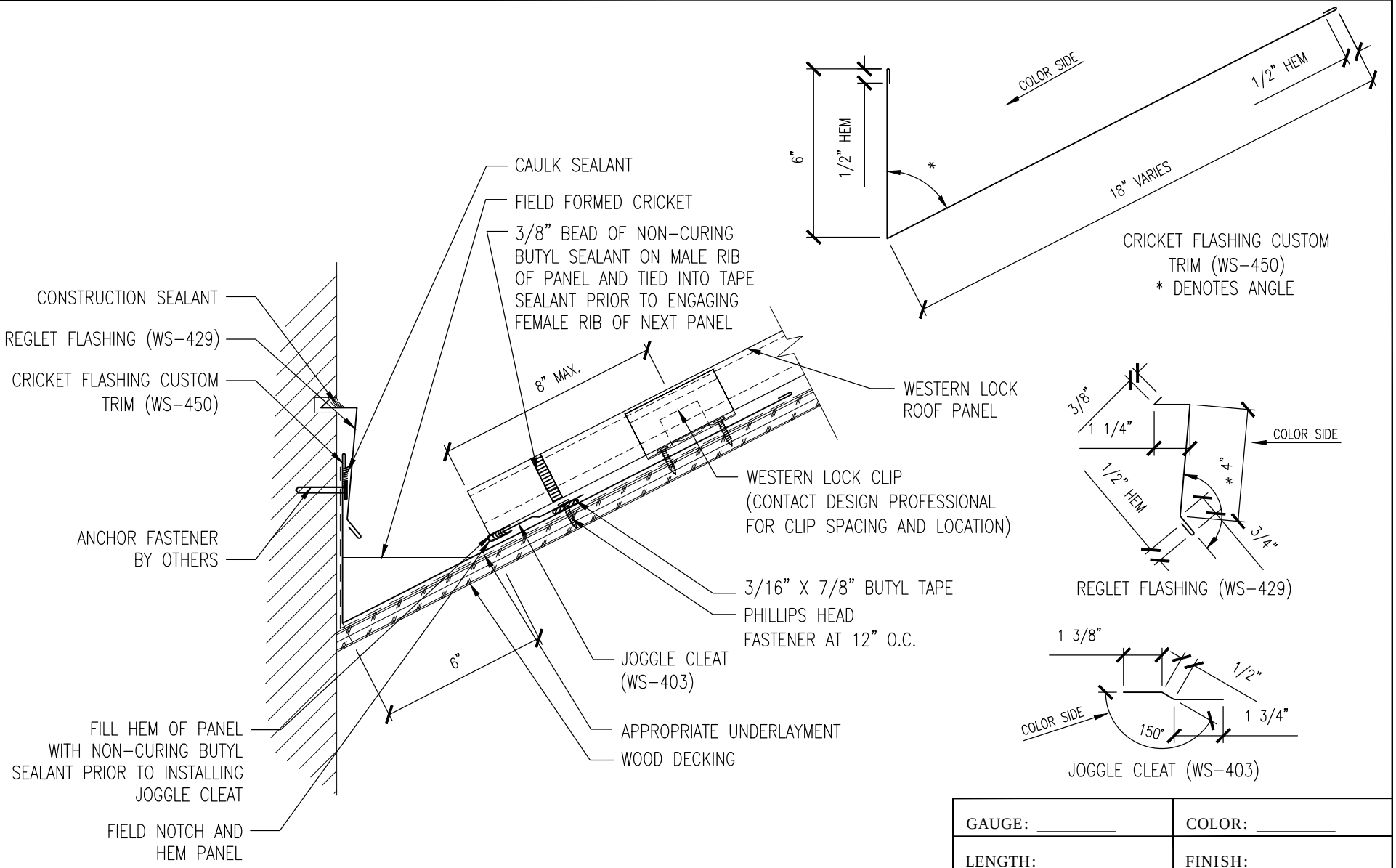

GAUGE: _____	COLOR: _____
LENGTH: _____	FINISH: _____
MATERIAL: _____	

Western States Metal Roofing

901 W. Watkins St.
Phoenix, AZ 85007
www.MetalForRoofing.com
www.RustedRoofing.com
www.MetalDeck.com

Phone: (602) 495-0048
Fax: (602) 261-7726
877-PURLINS (787-5467)

HALF VALLEY DETAIL

PANEL TYPE: WESTERN LOCK

REV:	DATE:
A	05-20-13

DETAIL #: WSD-D21

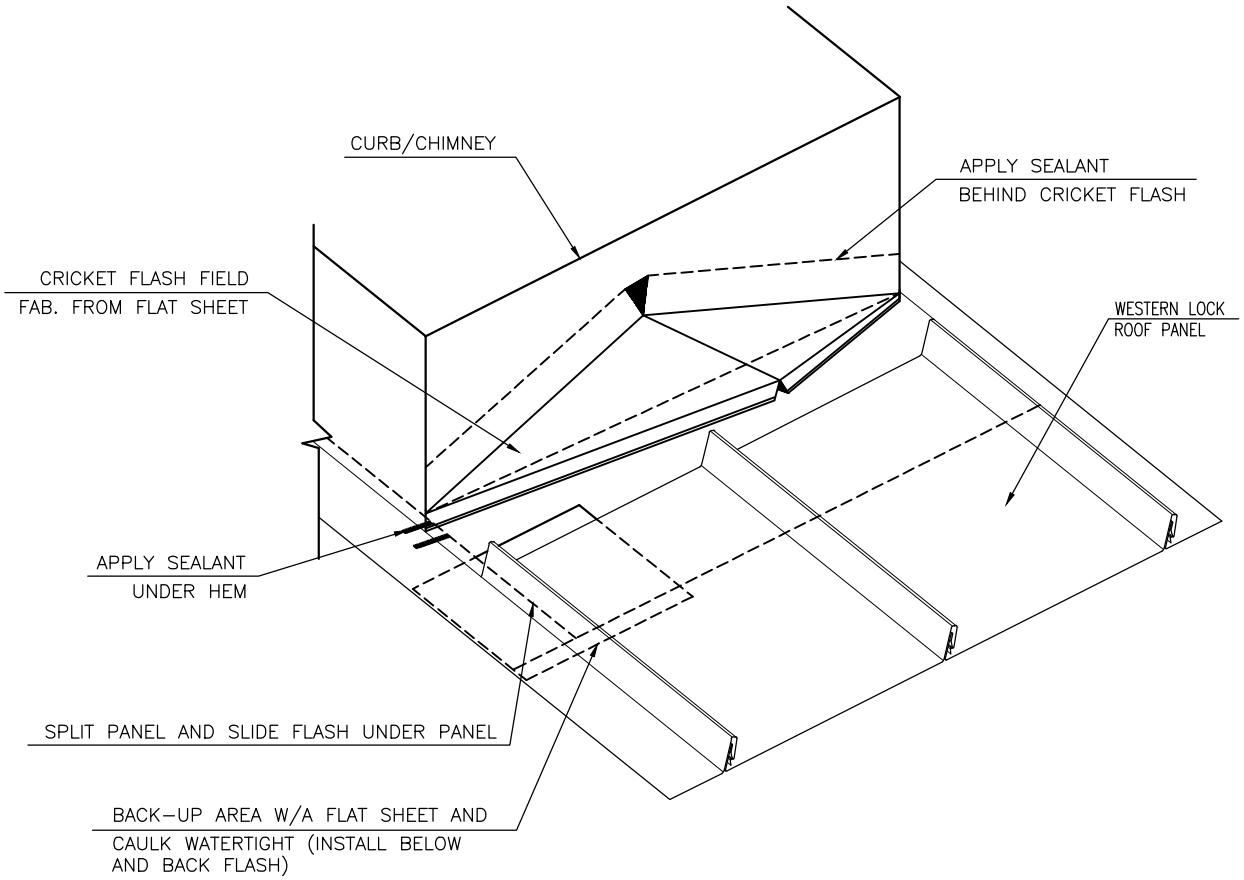

ISOMETRIC VIEW

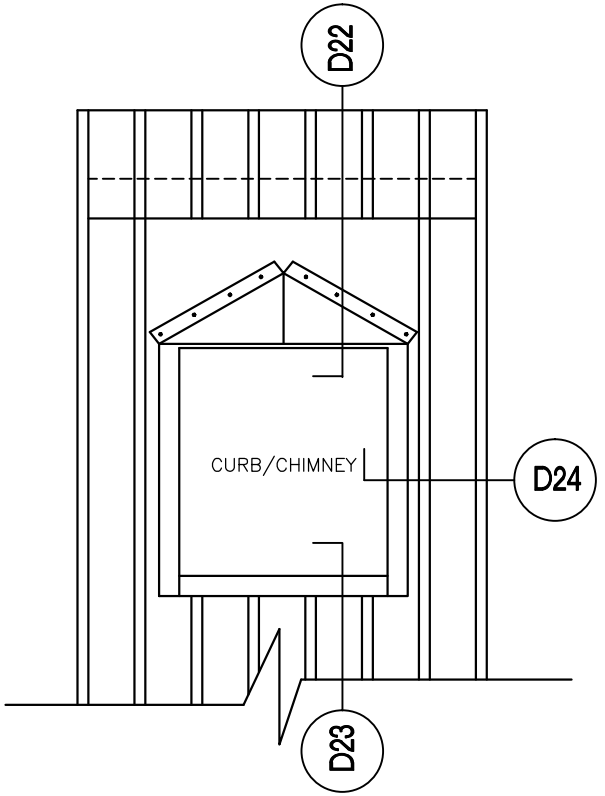

PLAN VIEW

GAUGE: _____	COLOR: _____
LENGTH: _____	FINISH: _____
MATERIAL: _____	

Western States Metal Roofing

901 W. Watkins St.
Phoenix, AZ 85007
www.MetalForRoofing.com
www.RustedRoofing.com
www.MetalDeck.com

Phone: (602) 495-0048
Fax: (602) 261-7726
877-PURLINS (787-5467)

ISOMETRIC CURB/CHIMNEY DETAIL	
PANEL TYPE: WESTERN LOCK	A / 05-20-13 (REV: / DATE:)
	DETAIL #: WSD-D22

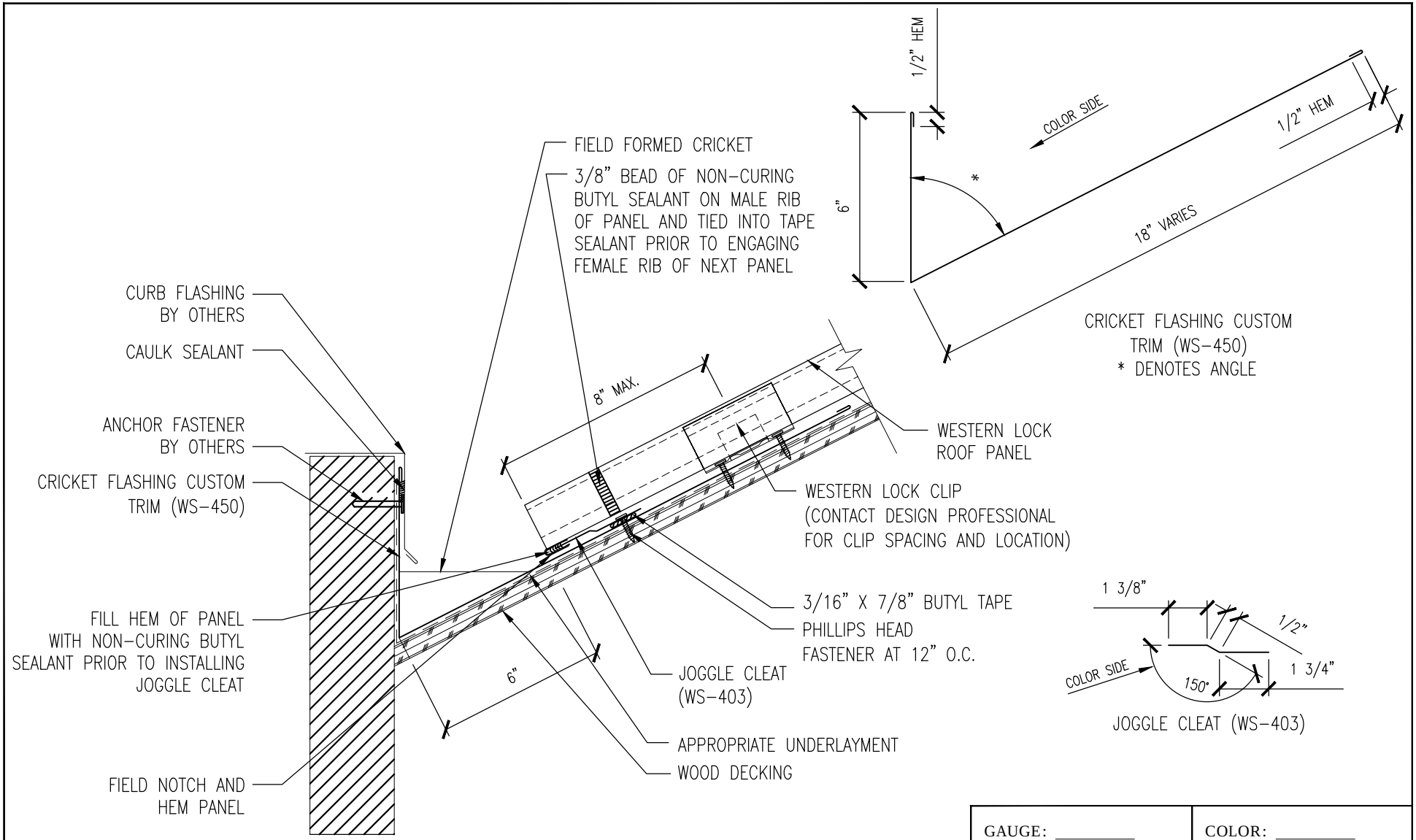

GAUGE: _____	COLOR: _____
LENGTH: _____	FINISH: _____
MATERIAL: _____	

Western States Metal Roofing

901 W. Watkins St.
Phoenix, AZ 85007
www.MetalForRoofing.com
www.RustedRoofing.com
www.MetalDeck.com

Phone: (602) 495-0048
Fax: (602) 261-7726
877-PURLINS (787-5467)

CRICKET FLASHING @ CURB/CHIMNEY DETAIL

PANEL TYPE: WESTERN LOCK

REV:	DATE:
A	05-20-13

DETAIL #: WSD-D23

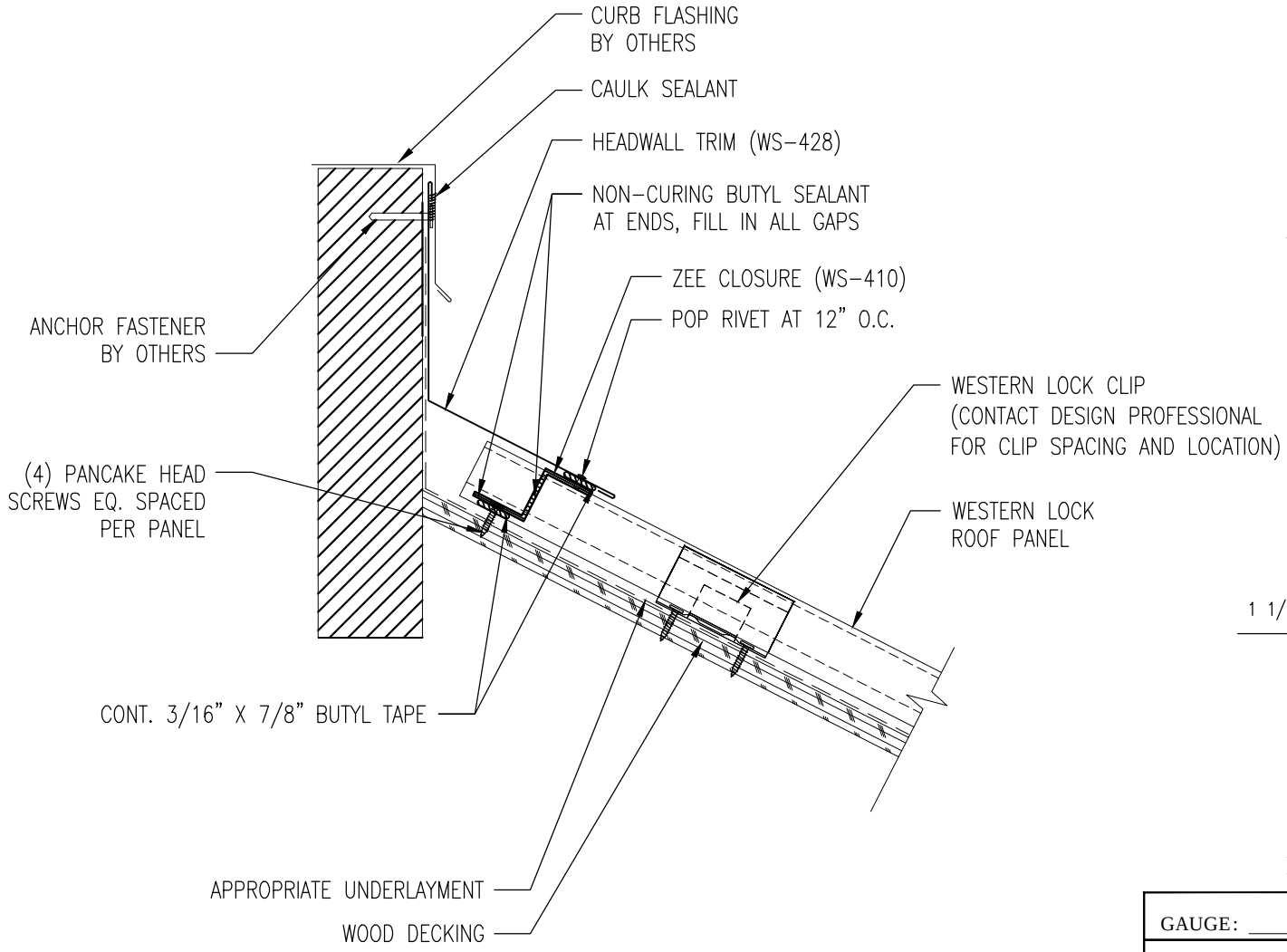

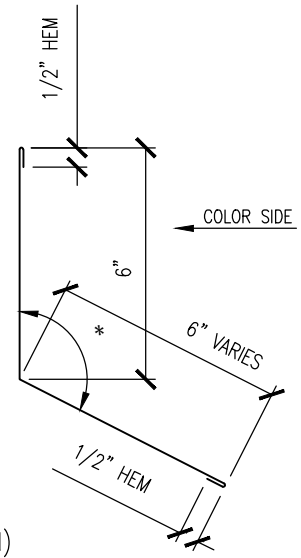

HEADWALL TRIM (WS-428)
* DENOTES ANGLE

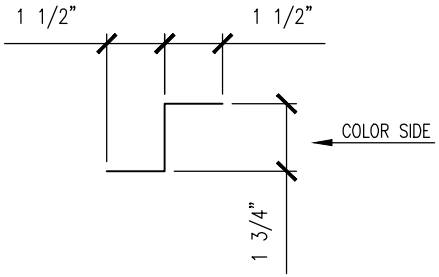

ZEE CLOSURE (WS-410)

GAUGE: _____	COLOR: _____
LENGTH: _____	FINISH: _____
MATERIAL: _____	

Western States Metal Roofing

901 W. Watkins St.
Phoenix, AZ 85007
www.MetalForRoofing.com
www.RustedRoofing.com
www.MetalDeck.com

Phone: (602) 495-0048
Fax: (602) 261-7726
877-PURLINS (787-5467)

PITCHBREAK @ CURB/CHIMNEY DETAIL

PANEL TYPE: WESTERN LOCK

REV:	DATE:
A	05-20-13

DETAIL #: WSD-D24

NOTE:
FIELD CUT FIRST AND
LAST PANELS TO EQUAL
WIDTHS.

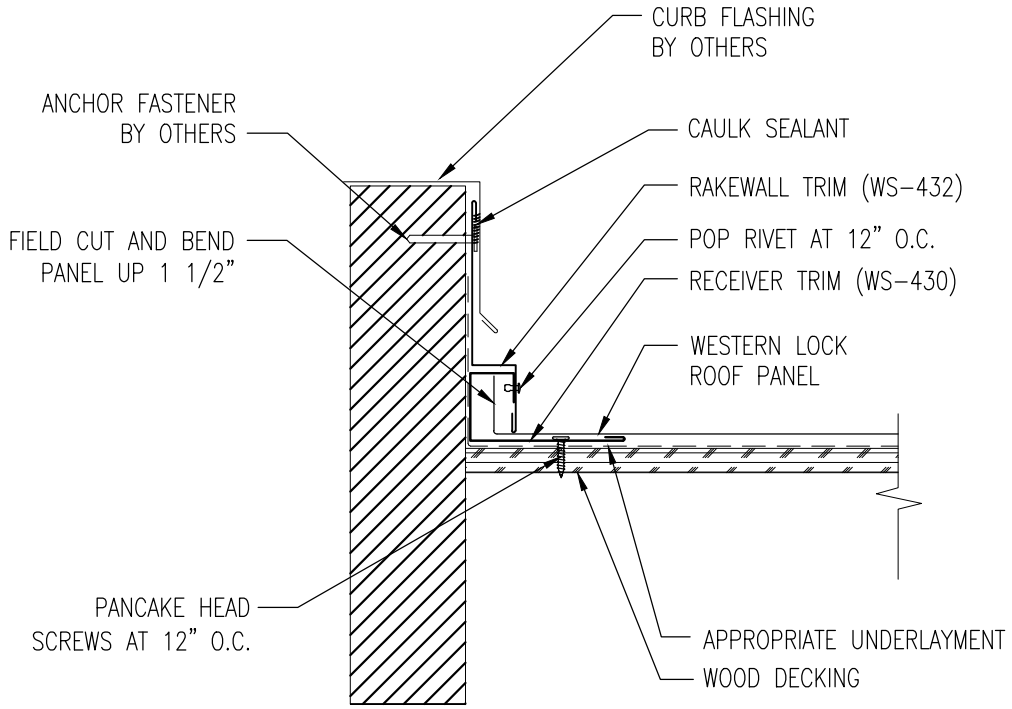

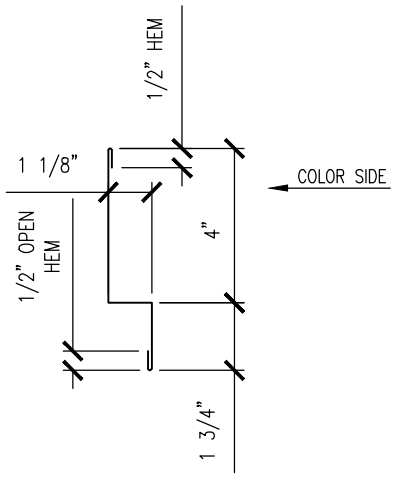

RAKEWALL TRIM (WS-432)

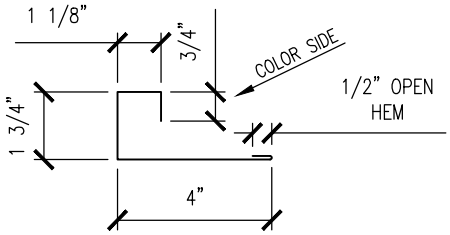

RECEIVER TRIM (WS-430)

GAUGE: _____	COLOR: _____
LENGTH: _____	FINISH: _____
MATERIAL: _____	

Western States Metal Roofing

901 W. Watkins St.
Phoenix, AZ 85007
www.MetalForRoofing.com
www.RustedRoofing.com
www.MetalDeck.com

Phone: (602) 495-0048
Fax: (602) 261-7726
877-PURLINS (787-5467)

SIDEWALL
@ CURB/CHIMNEY
DETAIL

PANEL TYPE:
WESTERN LOCK

REV:	DATE:
A	05-20-13

DETAIL #:
WSD-D25

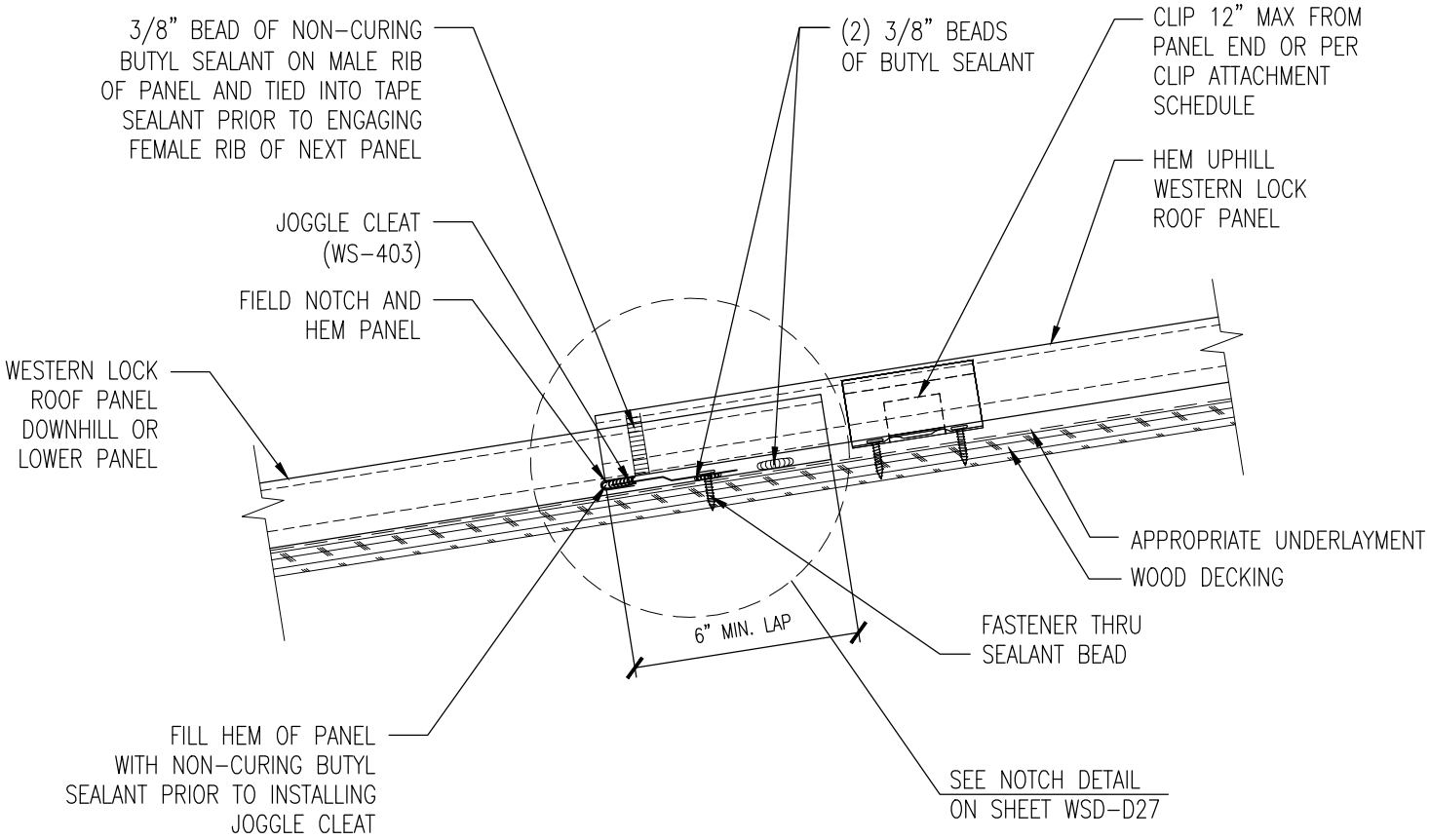

GAUGE: _____	COLOR: _____
LENGTH: _____	FINISH: _____
MATERIAL: _____	

Western States Metal Roofing

901 W. Watkins St.
Phoenix, AZ 85007
www.MetalForRoofing.com
www.RustedRoofing.com
www.MetalDeck.com

Phone: (602) 495-0048
Fax: (602) 261-7726
877-PURLINS (787-5467)

PANEL ENDLAP DETAIL

PANEL TYPE: WESTERN LOCK

REV:	DATE:
A	05-20-13

DETAIL #: WSD-D26

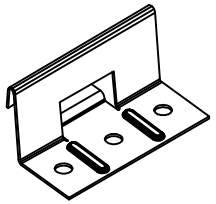

WESTERN LOCK CLIP

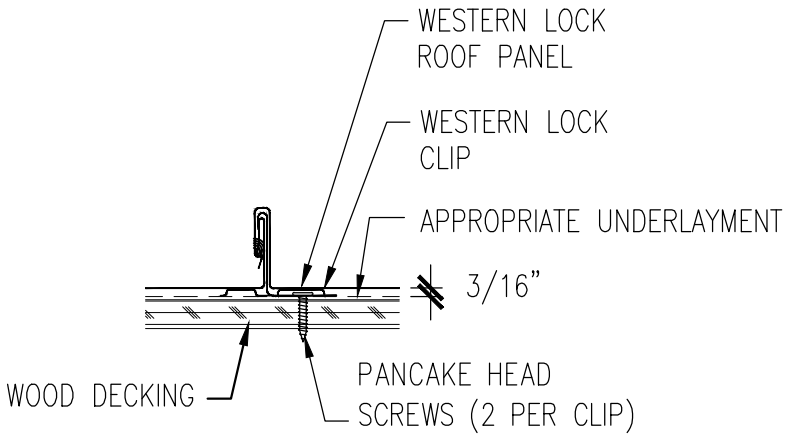

GAUGE: _____ COLOR: _____

LENGTH: _____ FINISH: _____

MATERIAL: _____

Western States Metal Roofing

901 W. Watkins St.
Phoenix, AZ 85007
www.MetalForRoofing.com
www.RustedRoofing.com
www.MetalDeck.com

Phone: (602) 495-0048
Fax: (602) 261-7726
877-PURLINS (787-5467)

PANEL CLIP DETAIL

PANEL TYPE: WESTERN LOCK

REV:	DATE:
A	05-20-13

DETAIL #: WSD-D26A

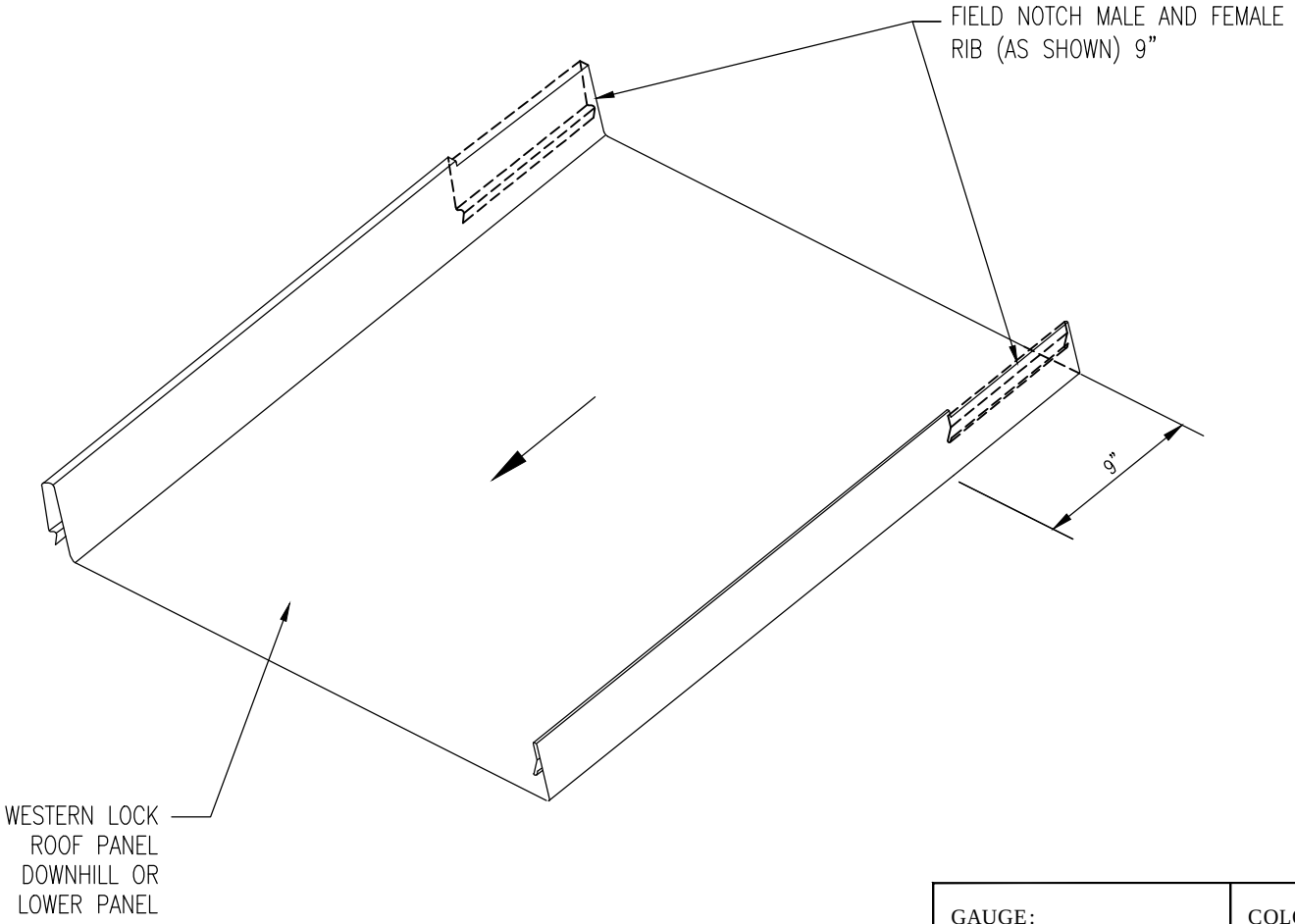

GAUGE: _____	COLOR: _____
LENGTH: _____	FINISH: _____
MATERIAL: _____	

Western States Metal Roofing

901 W. Watkins St.
Phoenix, AZ 85007
www.MetalForRoofing.com
www.RustedRoofing.com
www.MetalDeck.com

Phone: (602) 495-0048
Fax: (602) 261-7726
877-PURLINS (787-5467)

FIELD LAP DETAIL

PANEL TYPE: WESTERN LOCK

REV:	DATE:
A	05-20-13

DETAIL #: WSD-D27

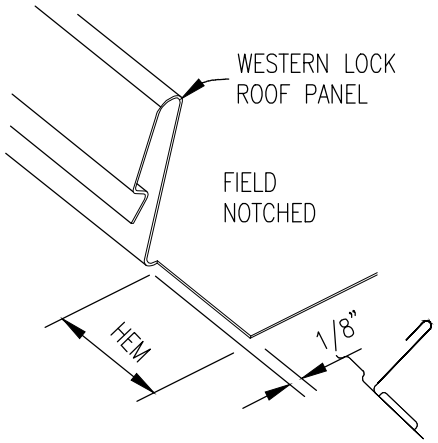

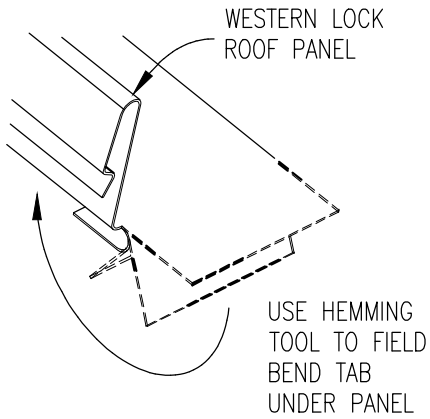

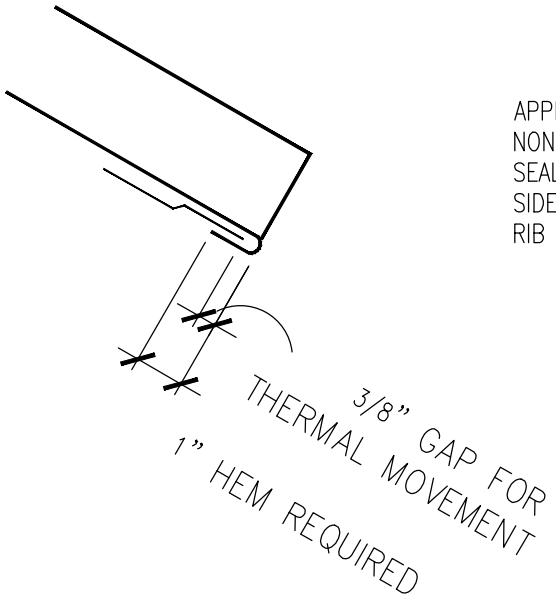

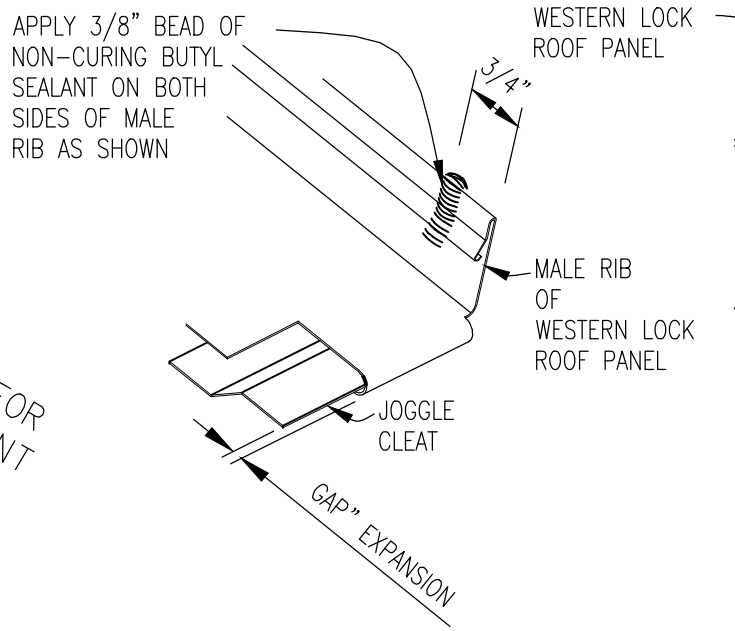

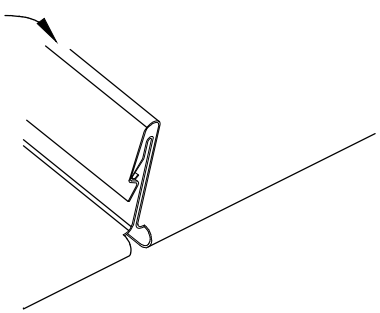

GAUGE: _____	COLOR: _____
LENGTH: _____	FINISH: _____
MATERIAL: _____	

Western States Metal Roofing

901 W. Watkins St.
Phoenix, AZ 85007
www.MetalForRoofing.com
www.RustedRoofing.com
www.MetalDeck.com

Phone: (602) 495-0048
Fax: (602) 261-7726
877-PURLINS (787-5467)

PANEL HEM DETAIL

PANEL TYPE: WESTERN LOCK

REV:	DATE:
A	05-20-13

DETAIL #: WSD-D28

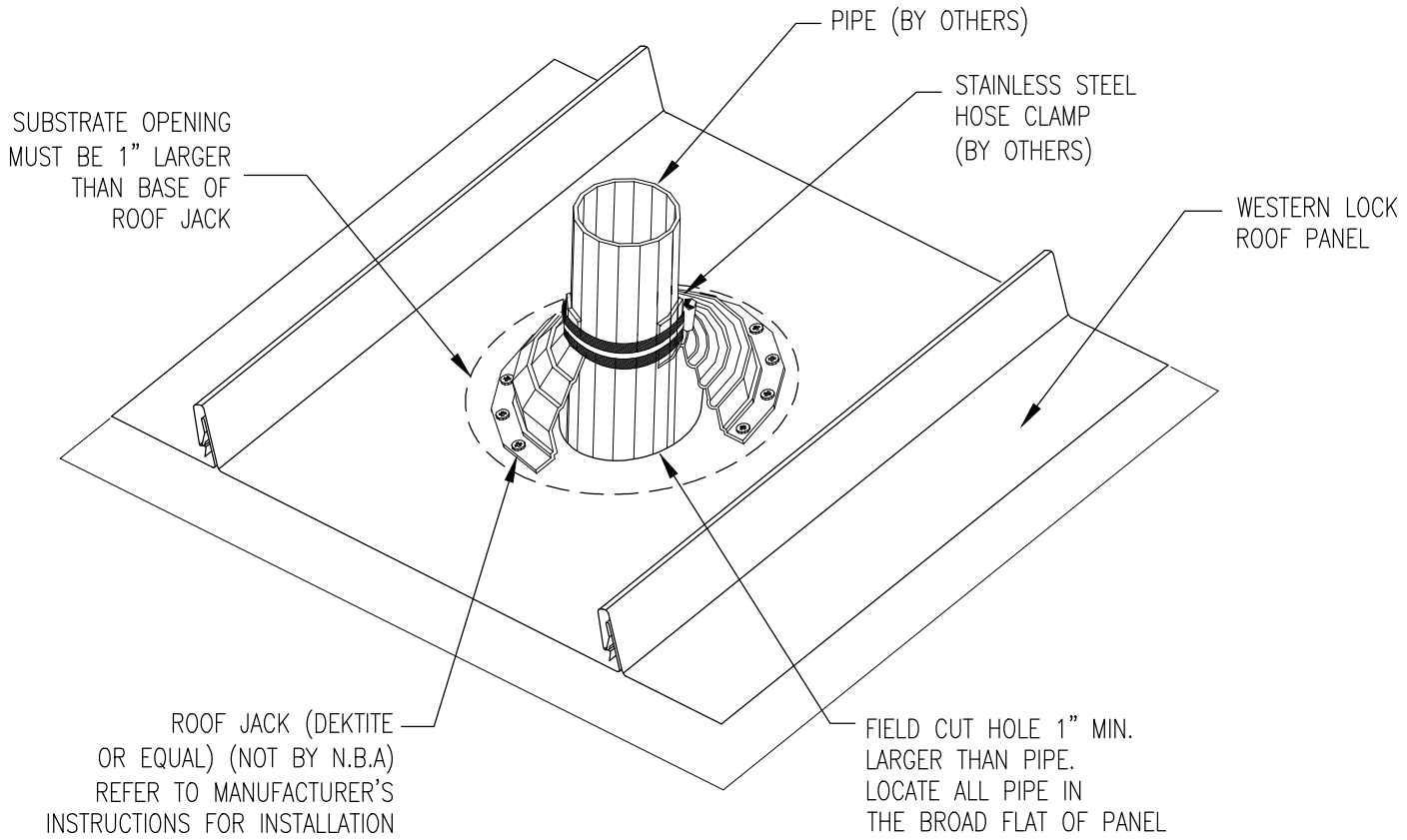

GAUGE: _____ COLOR: _____

LENGTH: _____ FINISH: _____

MATERIAL: _____

Western States Metal Roofing

901 W. Watkins St.
Phoenix, AZ 85007
www.MetalForRoofing.com
www.RustedRoofing.com
www.MetalDeck.com

Phone: (602) 495-0048
Fax: (602) 261-7726
877-PURLINS (787-5467)

PIPE PENETRATION DETAIL

PANEL TYPE: WESTERN LOCK

REV:	DATE:
A	05-20-13

DETAIL #: WSD-D29

NOTES:

Western States Metal Roofing
901 W. Watkins St.
Phoenix, AZ 85007
www.MetalForRoofing.com
www.RustedRoofing.com
www.MetalDeck.com
Phone: (602) 495-0048
Fax: (602) 261-7726
877-PURLINS (787-5467)

MISC. NOTES

PANEL TYPE:
WESTERN LOCK

REV:	DATE:
A	05-20-13

DETAIL #:
WSD-MN30

CUSTOM TRIM

GAUGE: _____	COLOR: _____
BREAKS: _____	FINISH: _____
LENGTH: _____	STRETCH OUT: _____
MATERIAL: _____	

Western States Metal Roofing

901 W. Watkins St.
Phoenix, AZ 85007
www.MetalForRoofing.com
www.RustedRoofing.com
www.MetalDeck.com

Phone: (602) 495-0048
Fax: (602) 261-7726
877-PURLINS (787-5467)

CUSTOM TRIM NAME:

_____

PANEL TYPE:

WESTERN LOCK

REV:	DATE:
A	05-20-13

DETAIL #:

WSD-CT31

Western States "Western Lock ™" Panel
Installation, Flashings & Shop Drawing Detail Guide

Special Design Considerations

The details contained in this guide are proven industry details and are intended to be used as a design aid and installation guide. It does not depict all situations that may be encountered on all projects. Modifications are the responsibility of the designer/ owner/ installer.
Consideration should be given for Fit for Purpose, Building use, Climate conditions such as temperature, snow, wind, and moisture, Governing Building Codes, and Maintenance.
It is highly recommended that all trims and flashings be of the same material as the panels (metal, gauge, finish) to ensure long term performance and durability. Where possible, flashing edges should be hemmed to strengthen the edge and protect the cut edge from exposure.

Acceptance

Use of this manual is strictly voluntary. Details that are provided are to be used as a guide only. Details may not be applicable for all situations. This guide provides one standard detail and WSDI accepts that other installation details may be needed and other details may exist. WSDI makes no guarantee as to the Weather Tightness of the system or details found with in this guide. The information in this manual is believed to be correct and accurate at the time of printing. WSDI reserves the right to change details, discontinue products, change designs at any time without incurring obligation. It is best to consult your Design Engineer for recommendations.

Underlayment

There are many types of underlayment's on the market today. All designed with a special purpose depending on the type of Metal and profile. Many different types of metal will require a different type of underlayment, such as A606-4 (Corten) which requires a High Temperature underlayment. It is best to consult your Design Engineer for recommendations.

Valley and Snow Design

Valley design and dimension must be the proper width to accommodate high snow, rain, ice, and slope conditions. If possible, splices, penetrations, valleys, roof elevation changes, should be minimized in areas of high snow and ice accumulations. Details found in this manual may not pertain in areas of high snow and ice accumulations.

Panel coverage and fastening

Normal panel width of "Western Lock" panel is 16". However depending on the finish selected and the required coil feed, other sizes may be available. . Please consult with your WSDI representative for details and fastening recommendations.

Safety and Maintenance

Walking on and installing any roof is dangerous! Extreme care should always be used when walking on roofs. Safety should always be a top priority and approved fall protection and equipment as approved by OSHA should always be used.
No roof is immune to severe weather or is completely maintenance free. To keep your roof performing as it was designed; an inspection and comprehensive maintenance program should be implemented.

References

For other installation techniques and details, The Sheet Metal and Air Conditioning Contractors National Association Inc. (SMACNA) and NRCA manuals are great resource for working with sheet metal.

Technical Assistance

Contact your WSDI sales or technical representative for any additional information or assistance. To insure you have the latest information available, please inquire or visit our web sites at www.metaldeck .com or Rustedroofing.com

Metal Roofing California website is owned and operated by:

WESTERN METAL DECK

(909) 467-2016 • METALROOFINGCALIFORNIA.COM

REQUEST A FREE METAL COLOR SAMPLE
Pick Up or Delivery (Available anywhere on the West Coast)

Western Metal Deck
616 S. Oaks Ave., Ontario, CA 91762
☎ (909) 467-2016
✉ sales@metalroofingcalifornia.com

https://www.facebook.com/westernmetaldeck/
https://www.instagram.com/westernmetaldeck1/
https://twitter.com/WesternDeck
https://www.youtube.com/channel/UCsZItingwPEu_ElXLXZ8Dvg